PIONEER®
The Art of Entertainment

Service Manual

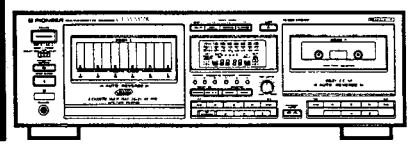

ORDER NO.
ARP2182

MULTI–CASSETTE CHANGER

CT-WM77R

MODEL CT–WM77R HAS THE FOLLOWING:

Type	Power Requirement	Remarks
KUC	AC120V only	
SD	AC110V, 120V–127V, 220V, 240V (switchable)	

- **This manual is applicable to the KUC and SD types.**
- **As to the SD type, refer to page 48.**

CONTENTS

1. SAFETY INFORMATION 2
2. DISASSEMBLY 3
3. PACKING 4
4. EXPLODED VIEWS AND PARTS LIST 5
5. SCHEMATIC DIAGRAM 17
6. P.C. BOARDS CONNECTION DIAGRAM 23
7. BLOCK DIAGRAM 31
8. P.C.B's PARTS LIST 32
9. ADJUSTMENTS 37
10. IC DESCRIPTIONS 41
11. FOR SD TYPE 48
12. PANEL FACILITIES 49
13. SPECIFICATIONS 51

PIONEER ELECTRONIC CORPORATION 4-1, Meguro 1-Chome, Meguro-ku, Tokyo 153, Japan
PIONEER ELECTRONICS SERVICE INC. P.O. Box 1760, Long Beach, California 90801 U.S.A.
PIONEER ELECTRONICS OF CANADA, INC. 505 Cochrane Drive, Markham, Ontario L3R 8E3 Canada
PIONEER ELECTRONIC [EUROPE] N.V. Keetberglaan 1, 2740 Beveren, Belgium
PIONEER ELECTRONICS AUSTRALIA PTY. LTD. 178-184 Boundary Road, Braeside, Victoria 3195, Australia TEL: [03] 580-9911

© PIONEER ELECTRONIC CORPORATION 1991

SI MAR. 1991 Printed in Japan

This service manual is intended for qualified service technicians; it is not meant for the casual do-it-yourselfer. Qualified technicians have the necessary test equipment and tools, and have been trained to properly and safely repair complex products such as those covered by this manual.
Improperly performed repairs can adversely affect the safety and reliability of the product and may void the warranty. If you are not qualified to perform the repair of this product properly and safely, you should not risk trying to do so and refer the repair to a qualified service technician.

WARNING
Lead in solder used in this product is listed by the California Health and Welfare agency as a known reproductive toxicant which may cause birth defects or other reproductive harm (California Health & Safety Code, Section 25249.5).
When servicing or handling circuit boards and other components which contain lead in solder, avoid unprotected skin contact with the solder. Also, when soldering do not inhale any smoke or fumes produced.

1. SAFETY INFORMATION

(FOR USA MODEL ONLY)

1. SAFETY PRECAUTIONS

The following check should be performed for the continued protection of the customer and service technician.

LEAKAGE CURRENT CHECK

Measure leakage current to a known earth ground (water pipe, conduit, etc.) by connecting a leakage current tester such as Simpson Model 229-2 or equivalent between the earth ground and all exposed metal parts of the appliance (input/output terminals, screwheads, metal overlays, control shaft, etc.). Plug the AC line cord of the appliance directly into a 120V AC 60Hz outlet and turn the AC power switch on. Any current measured must not exceed 0.5mA.

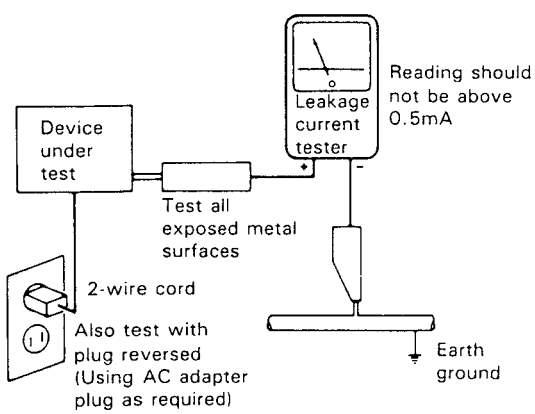

AC Leakage Test

ANY MEASUREMENTS NOT WITHIN THE LIMITS OUTLINED ABOVE ARE INDICATIVE OF A POTENTIAL SHOCK HAZARD AND MUST BE CORRECTED BEFORE RETURNING THE APPLIANCE TO THE CUSTOMER.

2. PRODUCT SAFETY NOTICE

Many electrical and mechanical parts in the appliance have special safety related characteristics. These are often not evident from visual inspection nor the protection afforded by them necessarily can be obtained by using replacement components rated for voltage, wattage, etc. Replacement parts which have these special safety characteristics are identified in this Service Manual.

Electrical components having such features are identified by marking with a ⚠ on the schematics and on the parts list in this Service Manual.
The use of a substitute replacement component which dose not have the same safety characteristics as the PIONEER recommended replacement one, shown in the parts list in this Service Manual, may create shock, fire, or other hazards.

Product Safety is continuously under review and new instructions are issued from time to time. For the latest information, always consult the current PIONEER Service Manual. A subscription to, or additional copies of, PIONEER Service Manual may be obtained at a nominal charge from PIONEER.

2. DISASSEMBLY

● REMOVAL OF FRONT PANEL ASSEMBLY (INCLUDING MECHANISM II)

1. Remove the bonnet.
2. Remove four screws at right and left and five screws at lower part fastening the panel stay and the chassis. (Refer to Figs. 2–1 and 2–2)
3. Remove a screw fastening the lead cover and remove the lead cover. (Refer to Fig. 2–2)
4. Remove the lead holder fastening the wirings (ban card). (Refer to Fig. 2–2)
5. Disconnect all the wirings from the front panel and remove the front panel assembly (including mechanism II).

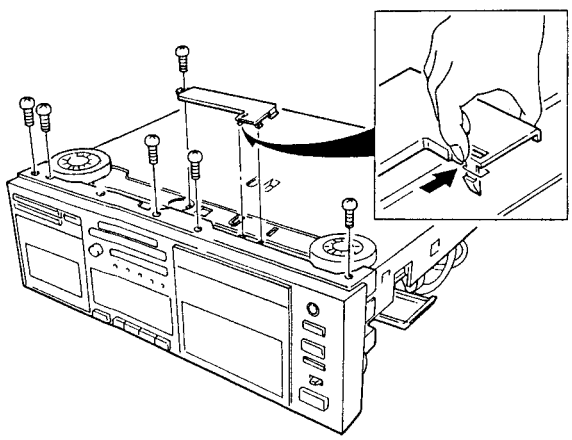

Fig. 2-1

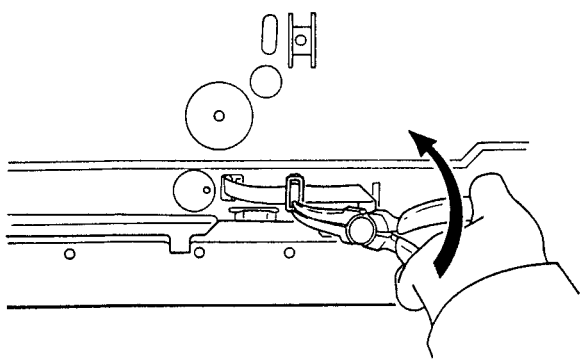

Fig. 2-2

● REMOVAL OF MECHANISM UNIT (MECHANISM II)

1. Remove the bonnet.
2. Remove or move the front panel assembly.
3. Remove three screws from the rear side of mechanism.
4. Remove the screw fastening at the lower part of the front panel assembly.

Note: The mechanism unit can be removed without removing the front panel assembly.

Remove the other blocks in the same procedures as CT–M6R.

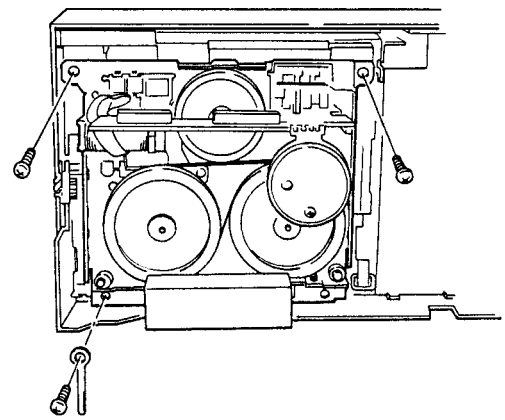

Fig. 2-3

3. PACKING

Parts List

Mark	No.	Part No.	Description
	1	RHA1044	Pad (F)
	2	RHA1045	Pad (R)
	3	RHG1233	Packing case
	4	RHL1001	Plustic bag
	5	RHX – 034	Sheet
	6	PDE – 319	Connection cord (Mini – plug)
	7	RDE1018	Control cord
	8	RPX1044	Remote control unit
	9	RRB1076	Operating instructions (English)
	10	PZN1001	Battery cover
	11	RDE – 010	Connection cord
	12	RRW1065	Title seal
	101		Dry cell battery (R03, AAA)
	102		Connection cord assembly
		* REE1017	Caution plate
		* RNK1620	Protector (Cassette tray)

* Caution plate and protector are used as a cassette tray protector when shipping.

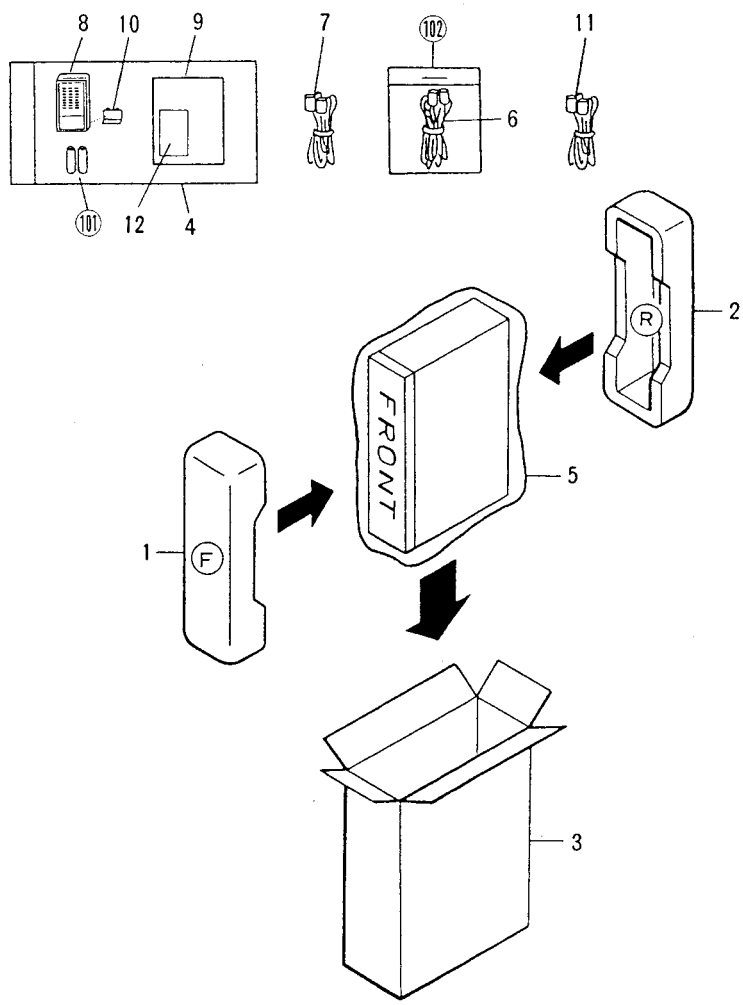

4. EXPLODED VIEWS AND PARTS LIST

NOTES:
- Parts without part number cannot be supplied.
- The ⚠ mark found on some component parts indicates the importance of the safety factor of the part. Therefore, when replacing, be sure to use parts of identical designation.
- Parts marked by "⊙" are not always kept in stock. Their delivery time may be longer than usual or they may be unavailable.

4.1 EXTERIOR

Parts List

Mark	No.	Part No.	Description
⚠	1	CM – 22C	Strain relief
⚠	2	PDG1015	AC Power cord
⚠	3	RDD1212	Ban card 7P
⚠	4	REK1001	FU501, FU502 Fuse (1.5A)
	5	RKP1415	Connector assembly 6P
⚠	6	RTT1152	Power transformer
	7	RBH1224	Door spring (L)
	8	RBH1281	Door spring (1)
	9	RBK1004	Half pressure spring
	10	REC1005	Damper assembly
	11	RNH – 184	Cord clamper
	12	RAC1262	VR knob (B)
	13	RAC1562	Slide SW knob
	14	RAC1591	Control button (1)
	15	RAC1592	Control button (2)
	16	RAC1593	Tact button (A)
	17	RAC1594	Tact button (B)
	18	RAC1595	REC button (1)
	19	RAC1596	REC button (2)
	20	RAC1597	Eject button
	21	RAC1598	Tact button (C)
	22	RAC1600	Power button
	23	RAH1784	REC mold (1)
	24	RAH1785	REC mold (2)
	25	RAH1788	FL filter
	26	REE – 113	Remain display paper
	27	RNK1695	Lead cover
	28	RNK1696	Door cover (1)
	29	RNK1697	Door cover (2)
	30	RNK1700	LED lens
	31	RNK1701	Door (1)
	32	RNT1013	Door pocket
	33	RNT1098	Panel stay
	34	VEC1061	Stopper
	35	VNK1095	Insulator
	36	VNK1566	Sensor acryl
	37	RAH1783	Door lens (1)
	38	RAH1786	FL lens
	39	RAH1787	Door lens (2)
	40	RNK1694	Tray plate

Mark	No.	Part No.	Description
	41	BBT30P080FZK	Screw
	42	BBZ26P080FZK	Screw
	43	BBZ30P060FZK	Screw
	44	BBZ30P080FMC	Screw
	45	BBZ30P120FMC	Screw
	46	BCZ26P050FMC	Screw
	47	FBT40P080FZK	Screw
	48	IBZ30P150FCU	Screw
	49	PMA30P060FMC	Screw
	50	RBM – 003	Nylon rivet
	51	RXX1250	Bonnet
	52	RXX1355	Front panel assembly
	53	REB1168	Cushion (CR sponge)
	54	REC – 371	Binder
	55	RRW1069	Caution seal
	101		Loading unit
	102		Mechanism unit
	103		PCB spacer
	104		Spacer
	105		Main chassis
	106		Mechanism shield plate
	107		Mechanism bracket
	108		Sheild plate (A)
	109		PCB holder (A)
	110		Lead holder
	111		Name plate
	112		Front panel
	113		Rear panel
	114		MAIN unit
	115		H.PHONE unit
	116		M.S. METER unit
	117		SW unit
	118		TRANSISTOR (A) unit
	119		TRANSISTOR (B) unit
	120		TRANSISTOR (C) unit
	121		POWER SW unit
	122		SUB (1) unit
	123		SUB (2) unit
	124		VOLUME unit
	125		DOOR IND unit
	126		REMOTE CONTROL unit
	127		REC (1) unit

Exterior

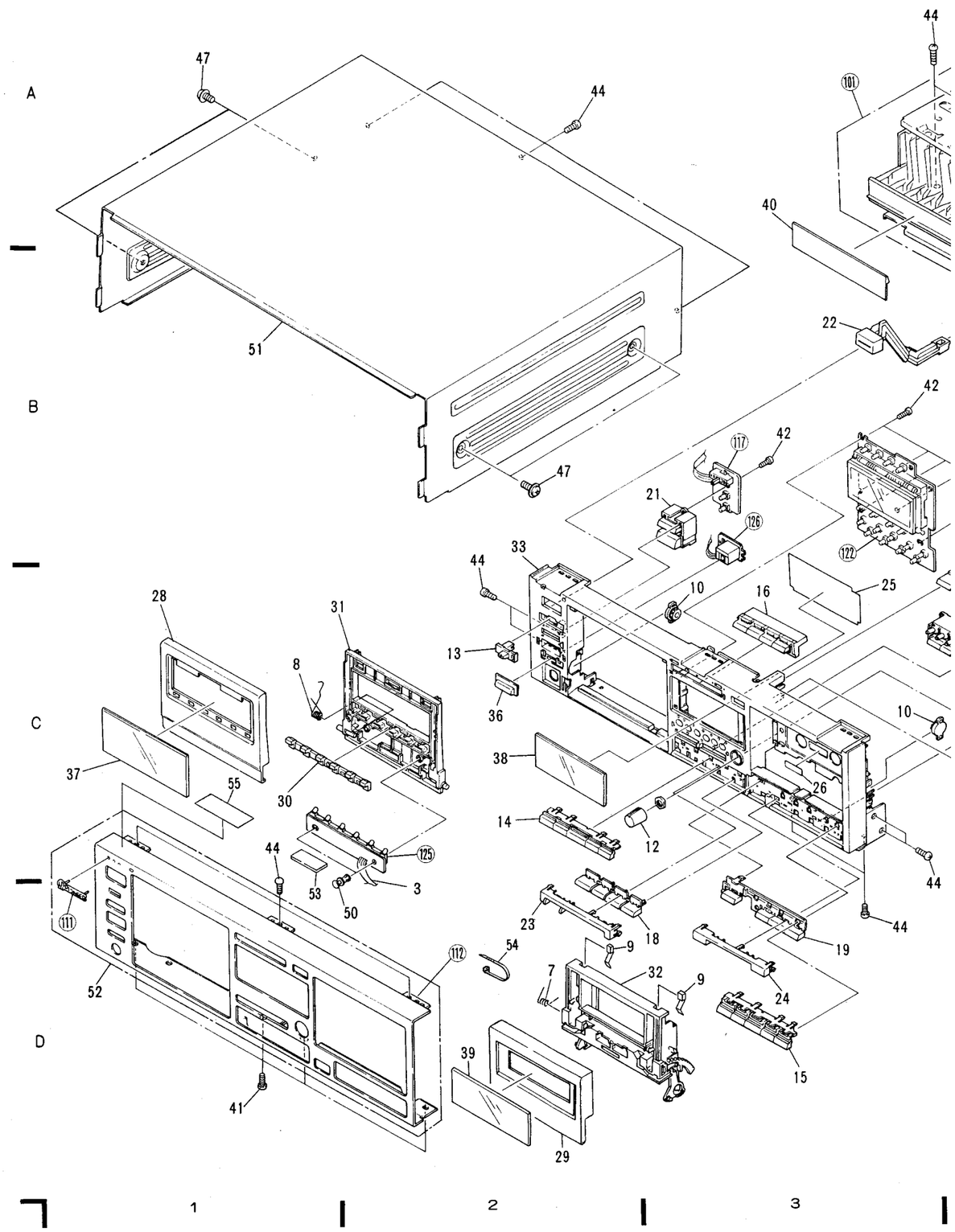

Exterior

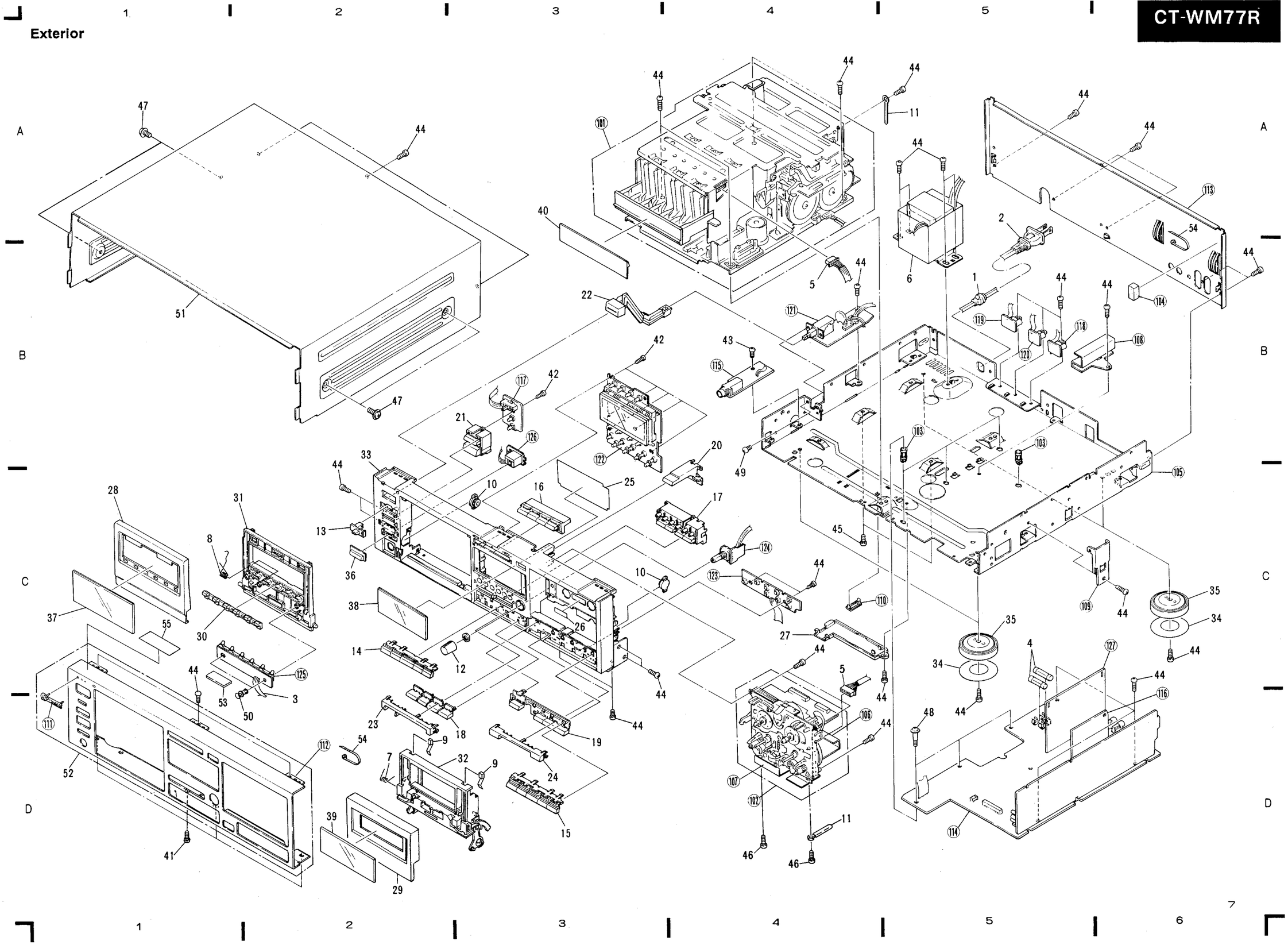

replacing, be sure

able.

cription

assembly
R sponge)

l

it
unit

s

shield plate
bracket
(A)
(A)

nit

R unit

)R (A) unit
)R (B) unit
)R (C) unit

unit
it
it
nit
unit

ONTROL unit
it

4.2 LOADING UNIT

Parts List

Mark	No.	Part No.	Description
	1	RKP1385	Connector assembly 6P
	2	RBH1269	Carrier earth spring
	3		·····
	4	BBZ30P080FMC	Screw
	5	DSG1014	Push switch
	6	RDD1185	Lead card 10p
	7	RXA1323	Encoder assembly
	8	RBH1243	Switch spring
	9	RNK1551	Drive gear (A)
	10	RNK1552	Drive gear (B)
	11	RNK1553	Interval gear
	12	REB1127	O/C belt
	13	RNK1606	Rack plate
	14	RNK1604	Pulley gear
	15	RBH1244	Reset lever spring
	16	RBH1247	Cassette pressure spring
	17	RBK1033	Cassette hold spring
	18	REB1120	Drive belt
	19	RED1024	Pressure felt
	20	RLA1137	Guide shaft
	21	RLA1140	Loading shaft
	22	RLA1141	Worm shaft
	23	RNK1558	Upper holder
	24	RNK1560	Cassette arm
	25	RNK1561	Upper rack
	26	RNK1562	Reset lever
	27	RNK1573	Carrier slider
	28	RNK1576	Loading gear
	29	RNK1577	Encoder gear
	30	RNK1578	Selector
	31	RNK1579	Cassette pressure (A)
	32	RNK1580	Cassette pressure (B)
	33	RXA1319	Worm pulley assembly
	34	RBH1274	Stopper arm spring
	35	RBH1246	Stopper pin spring
	36	RLA1138	Stopper pin
	37	RNK1564	Tray
	38	RNK1565	Stopper arm
	39	RNK1567	Cassette holder
	40	RNK1568	Side rail (L)
	41	RNK1569	Side rail (R)
	42	RNK1570	Drive plate (A)
	43	RNK1571	Drive plate (B)
	44	PBP – 007	Steel ball ϕ 5
	45	RNE1373	Shield band
	46	ABZ30P080FMC	Screw
	47	BPZ20Y060FMC	Screw
	48	BBZ26P100FMC	Screw
	49	BBZ26P140FZK	Screw
	50	BBZ30P060FZK	Screw
	51	PMZ30P040FMC	Screw
	52	WA21D085D025	Washer
	53	WT21D050D050	Washer
	54	WA26D047D050	Washer
	55	RXX1307	Motor assembly
	56	RBH1256	Cassette pressure spring 2
	57	WT26D047D050	Washer
	58	WT17D034D050	Washer
	59	BBZ20P040FMC	Screw
	60	RBH1261	Earth spring
	61	REB1129	Tray stopper
	62	ABZ30P150FMC	Screw
	63	BBZ26P080FZK	Screw
	101		Loading unit
	102		Load plate
	103		Bottom chassis
	104		Upper chassis
	105		Carrier plate
	106	PNW1634	Motor pulley
	107		Lead holder
	108		Carrier assembly
	109		Tray base
	110		Bottom unit
	111		Upper unit
	112		Carrier unit
	113		Connector unit
	114		Switch unit

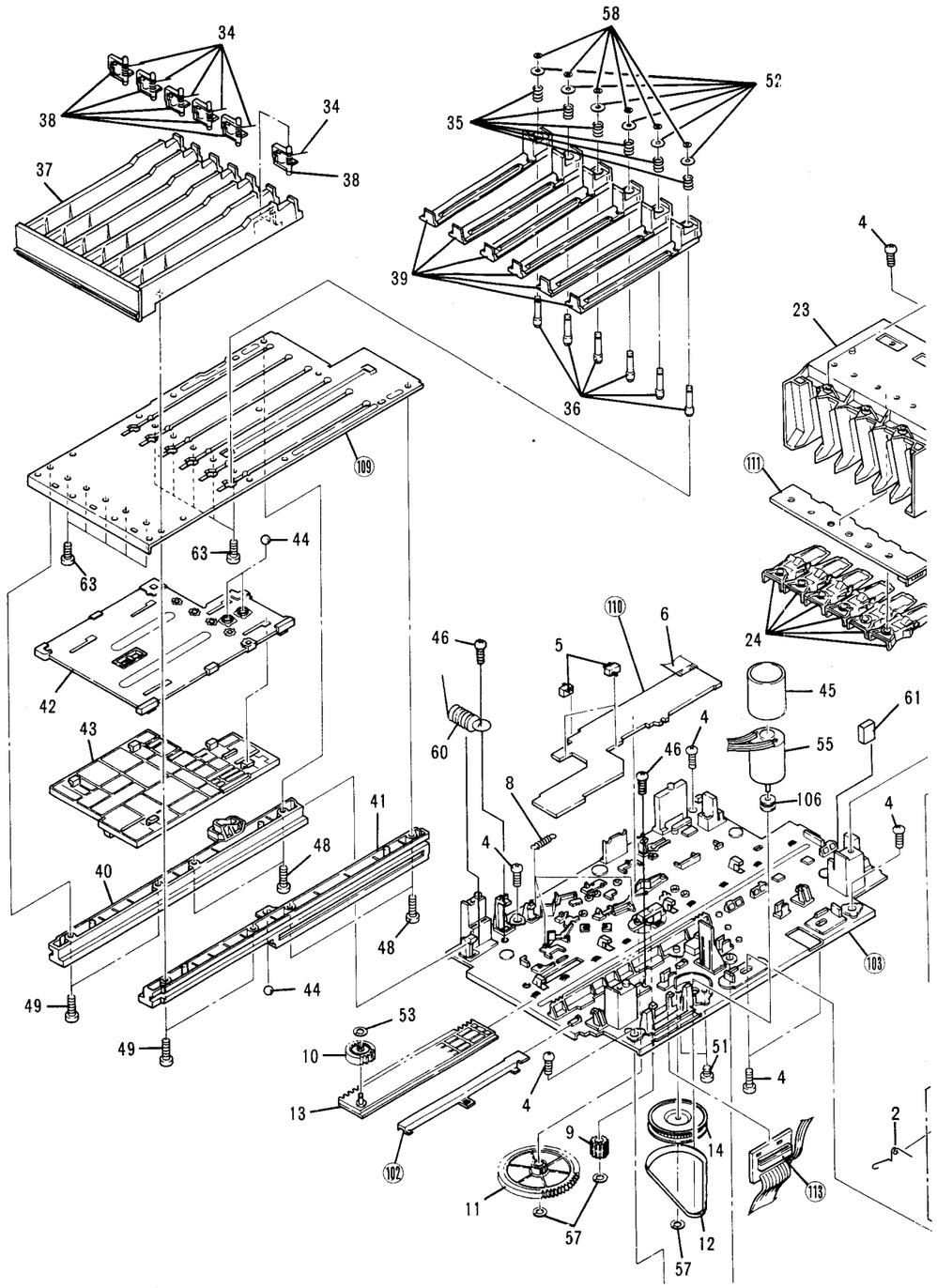

Loading Unit

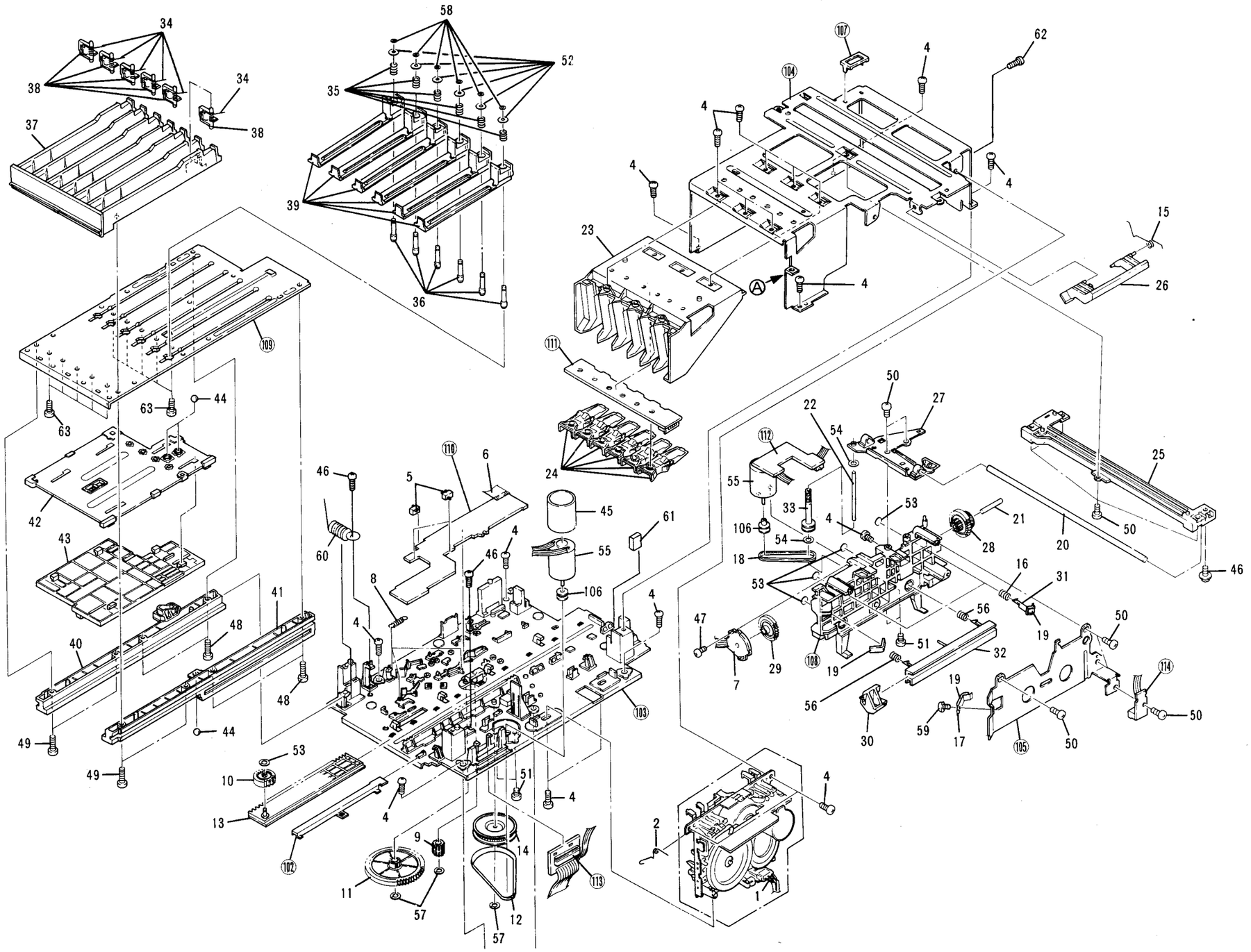

4.3 MECHANISM UNIT (DECK I)

Parts List

Mark	No.	Part No.	Description
	1	RLA1130	Shaft
	2	RLA1132	Planger
	3	RNP1232	HD FPC (R/P)
	4	RPB1030	R/P, E head
	5	RSG1018	Push switch
	6	RXM1029	Motor assembly
	7	RXM1030	Motor assembly (Main)
	8	RXP1010	Solenoid
	9	SPI33534FG	Photo transistor
	10	RNK1530	Wire holder
	11	REB1157	Main belt
	12	RXA1183	Pinch roller assembly
	13	RXA1294	Flywheel assembly
	14	RXA1295	Flywheel assembly
	15	RXA1296	Pinch roller (L) assembly
	16	RBA1076	Screw
	17	RBF – 057	Washer
	18	RXA1184	TU Reel assembly
	19	RXA1248	Idler assembly
	20	RBF1037	Washer
	21	PMZ14P050FNI	Screw
	22	RBA1080	Azimuth screw
	23	RBK1029	Azimuth spring
	24	RBL – 085	Rotation spring
	25	RBL1003	Head base spring
	26	RXA1293	Head housing assembly
	27	RBH1239	Slide spring
	28	RNK1525	Play arm
	29	RNK1672	Cam gear
	30	RBK1031	Cassette hold spring
	31	RNK1527	REC detection lever
	32	RNK1537	Metal detection lever (R)
	33	RNK1543	Pack detection lever (P)
	34	PBZ30P080FMC	Screw
	35	PMZ26P050FMC	Screw
	36	RBA1077	Screw
	37	WA26D045D025	Washer
	38	WA26D047D050	Washer
	39	YE15FUC	Washer
	40	RED1027	Holder cushion (L)
	41	RXA1378	HEAD assembly (R/P)
	101		Triple – conductor jumper wire
	102		Dual – conductor jumper wire
	103		Jumper wire
	104	RKP1401	Connector (6P)
	105	RKP1327	Connector (8P)
	106	RNP1350	P.C. board
	107	RXA1291	Chassis assembly
	108		Head base
	109	RNE1345	Slide plate
	110		Connector (12P)
	111		.....
	112		.....
	113	RNP1351	Head P.C.B R/P

※ The head assembly (R/P) in No. 41 is a component of Nos. 3 and 4 and can be supplied as service.

Mechanism Unit (Deck I)

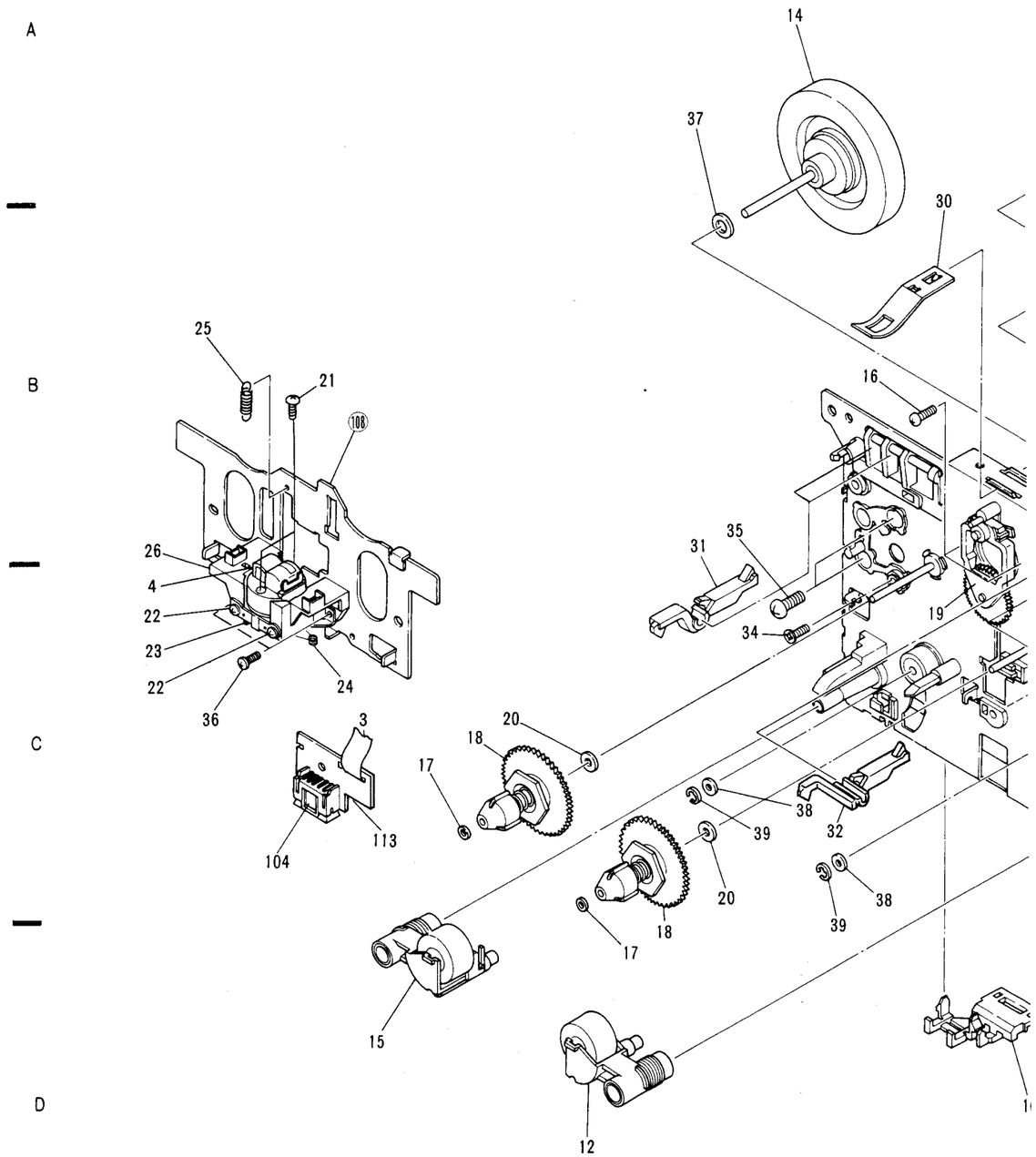

Mechanism Unit (Deck I)

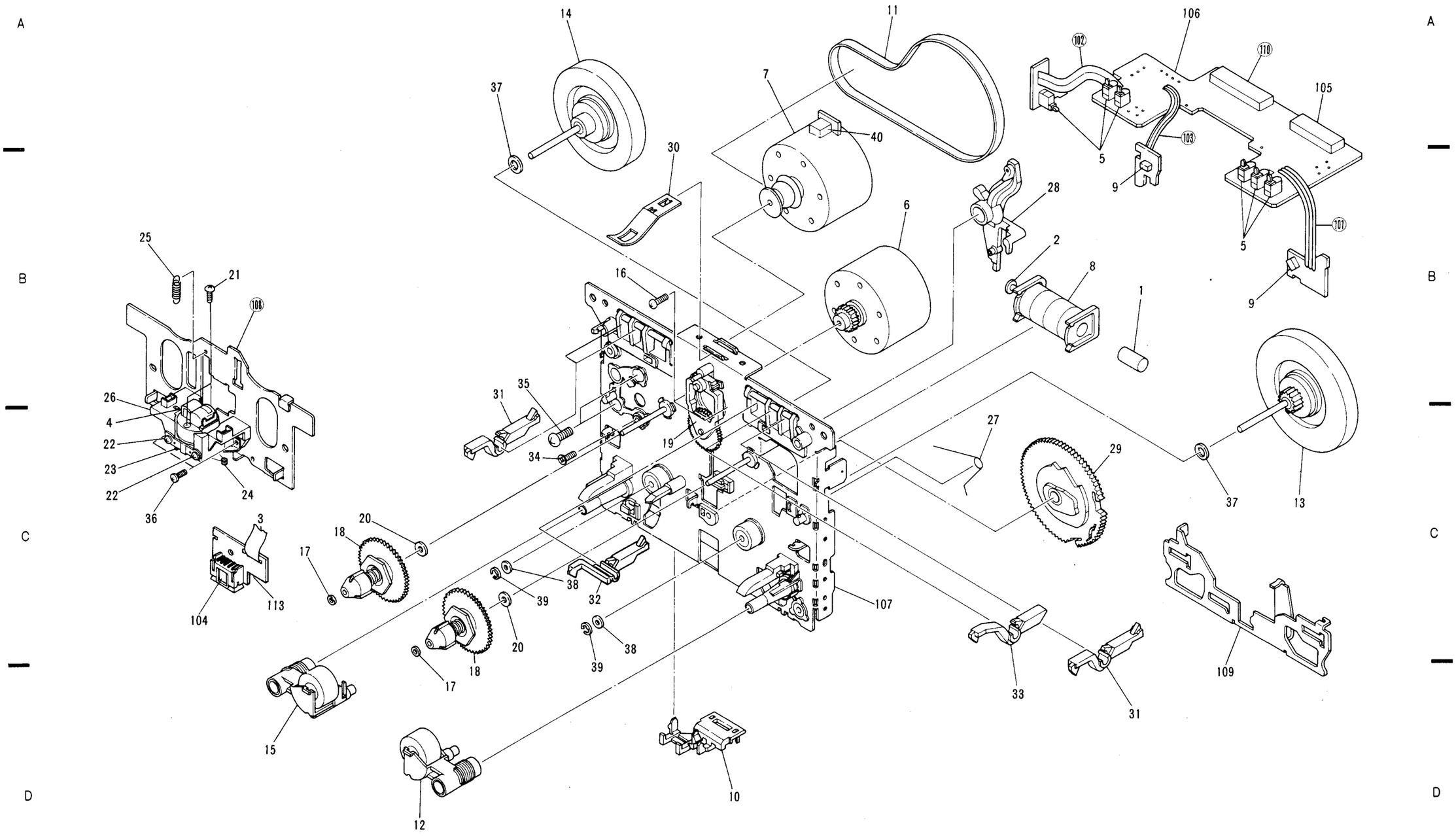

ption

ly

')

'P

omponent of
ice.

4.4 MECHANISM UNIT (DECK II)

Parts List

Mark	No.	Part No.	Description
	1	RLA1130	Shaft
	2	RLA1132	Planger
	3	RNP1232	HD FPC (R/P)
	4	RPB1030	R/P, E head
	5	RSG1018	Push switch
	6	RXM1029	Motor assembly
	7	RXM1030	Motor assembly (Main)
	8	RXP1010	Solenoid
	9	SPI33534FG	Photo transistor
	10	RNK1530	Wire holder
	11	REB1157	Main belt
	12	RXA1183	Pinch roller assembly
	13	RXA1294	Flywheel assembly
	14	RXA1295	Flywheel assembly
	15	RXA1296	Pinch roller assembly (L)
	16	RBA1076	Screw
	17	RBF – 057	Washer
	18	RBF1038	Washer
	19	RXA1184	TU reel assembly
	20	RXA1248	Idler assembly
	21	RXC – 040	Reel assembly
	22	PMZ14P050FNI	Screw
	23	RBA1080	Azimuth screw
	24	RBK1029	Azimuth spring
	25	RBL – 085	Rotation spring
	26	RBL1003	Head base spring
	27	RXA1293	Head housing assembly
	28	RBH1239	Slide spring
	29	RNK1525	Play arm
	30	RNK1672	Cam gear
	31	RBA1078	Screw
	32	RBH1234	Eject prevention spring (L)
	33	RBH1262	Eject lever spring (L)
	34	RBK1031	Cassette hold spring
	35	RLA1146	Lever collar (B)
	36	RNK1527	REC detection lever
	37	RNK1529	Metal detection lever (L)
	38	RNK1543	PACK detection lever (P)
	39	RNK1593	Eject lever (L)
	40	PBZ30P080FMC	Screw
	41	PMZ26P050FMC	Screw
	42	RBA1048	Screw
	43	RBA1077	Screw
	44	WA26D045D025	Washer
	45	WA26D047D050	Washer
	46	YE15FUC	Washer
	47	RED1027	Holder cushion (L)
	48	RXA1378	HEAD assembly (R/P)

Mark	No.	Part No.	Description
	100		Tripe – conductor jumper wire
	101	RKP1401	Connector (6P)
	102		Connector (7P)
	103		Connector (10P)
	104	RNP1279	P.C. board
	105	RNP1351	Head P.C.B (R/P)
	106	RXA1291	Chassis assembly
	107		Head base
	108	RNE1345	Slide plate
	109		Eject prevention arm (L)

※ The head assembly (R/P) in No. 48 is a component of Nos. 3 and 4 and can be supplied as service.

Mechanism Unit (Deck II)

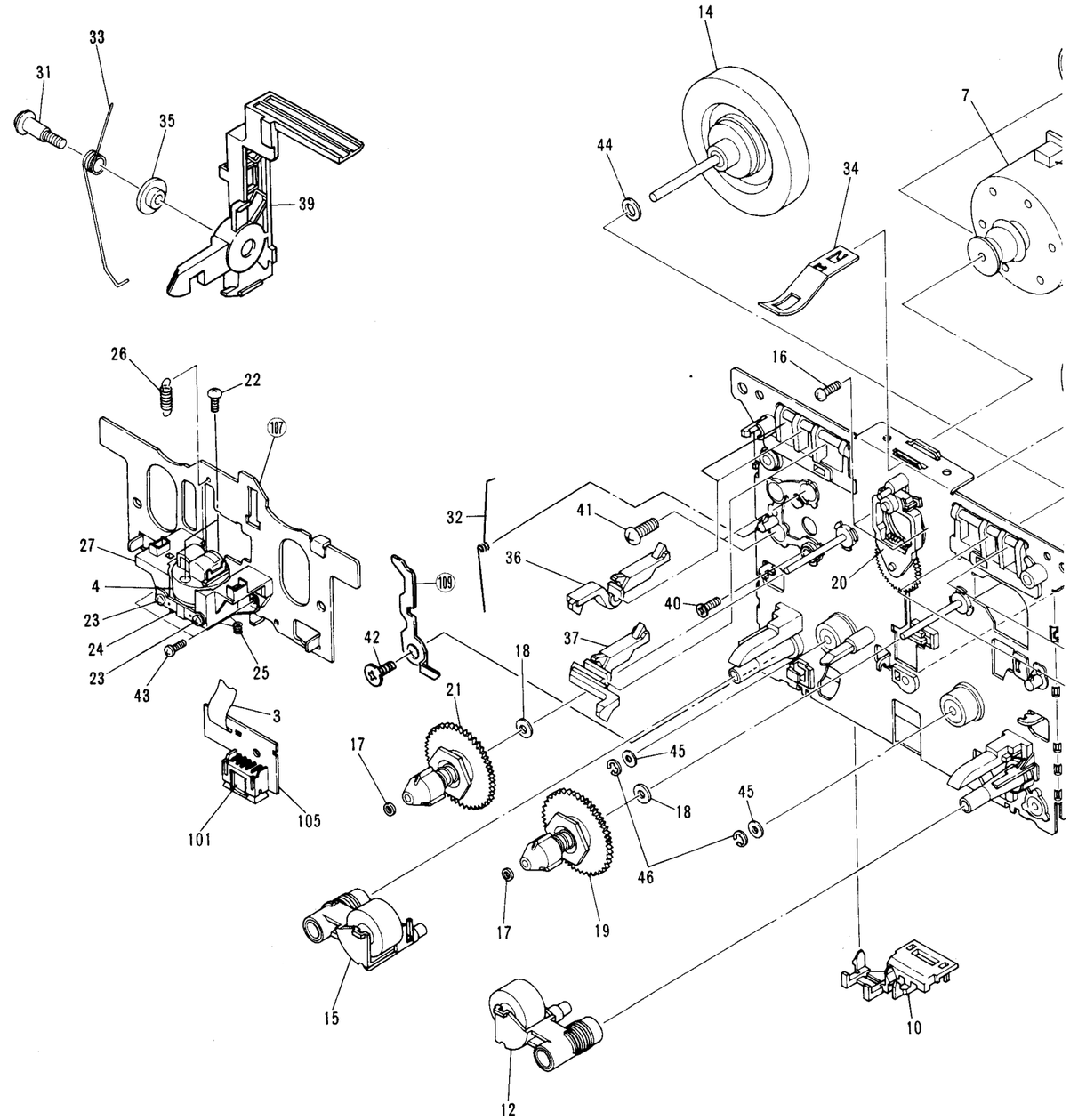

Mechanism Unit (Deck II)

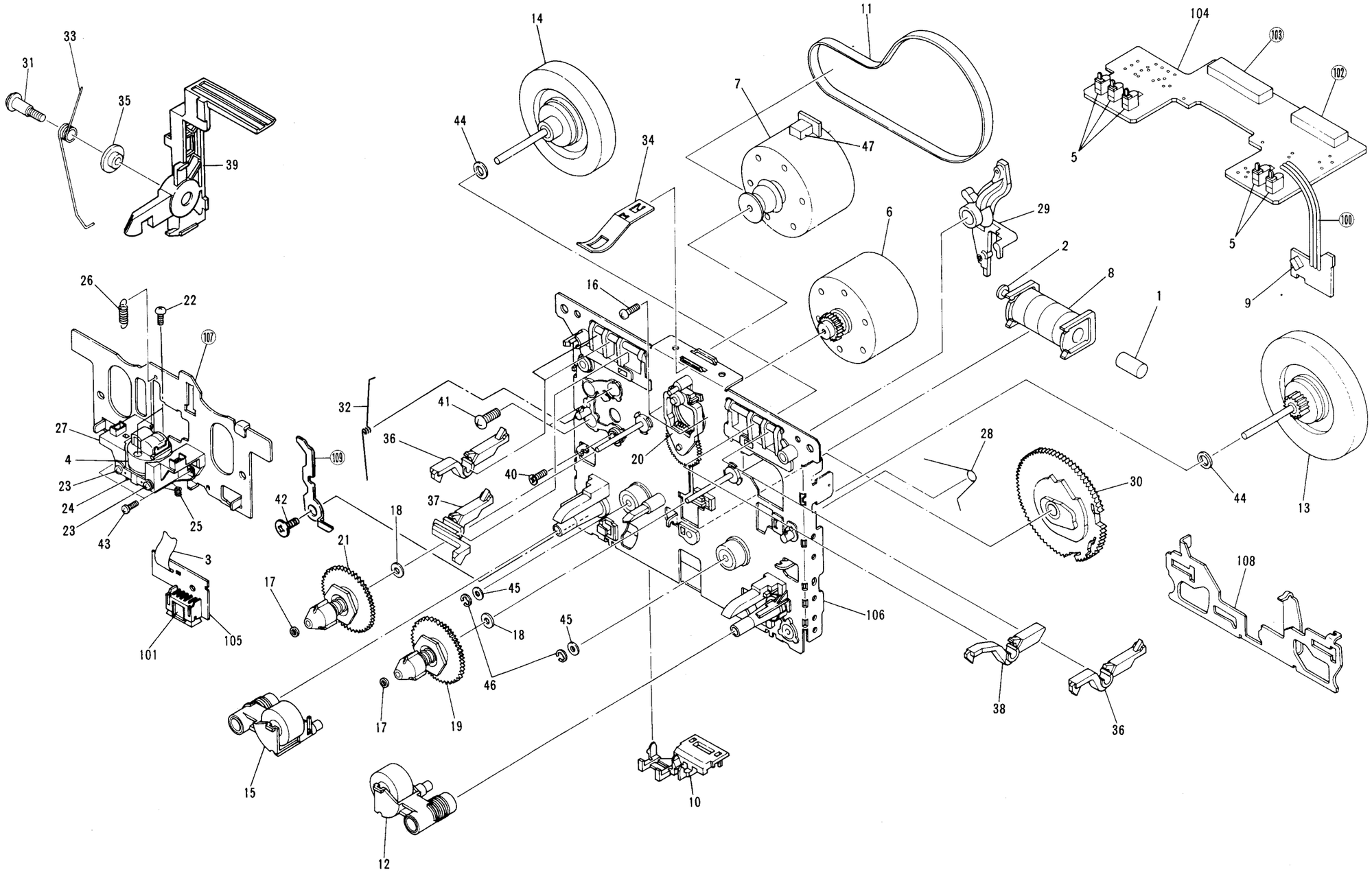

5. SCHEMATIC DIAGRAM

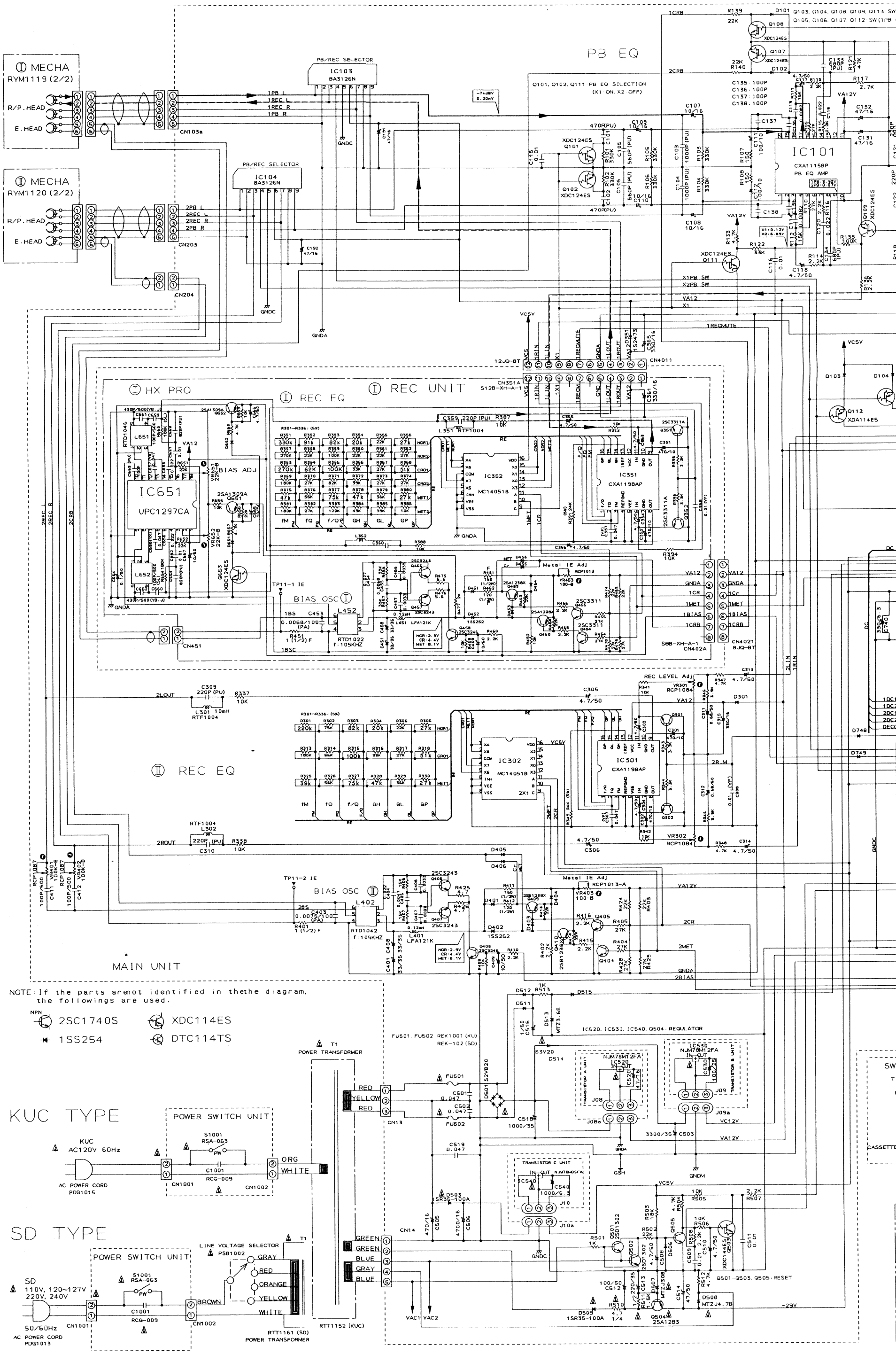

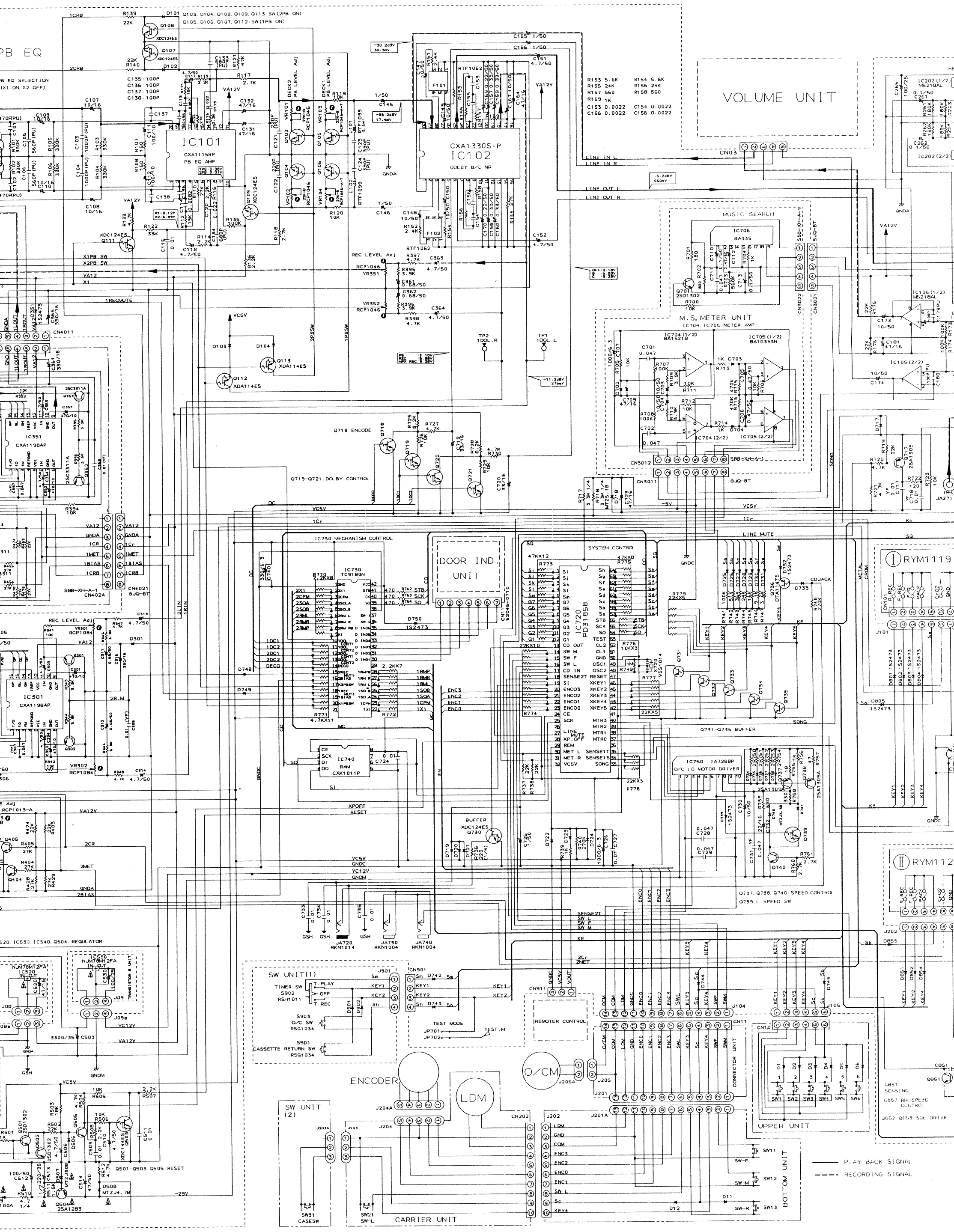
PB EQ
PB EQ SELECTION
(X1 ON, X2 OFF)
IC101
CXA1115BP
PB EQ AMP
CXA1330S-P
IC102
DOLBY B/C NR
VOLUME UNIT
MUSIC SEARCH
IC706
BA335
M.S. METER UNIT
IC704, IC705 METER AMP
IC704 (1/2)
BA15218
IC705 (1/2)
BA10395N
IC704 (2/2)
IC705 (2/2)
IC105 (1/2)
M5218AL
IC105 (2/2)
IC202 (1/2)
M5218AL
IC202 (2/2)
IC351
CXA1198AP
IC301
CXA1198AP
Q718 ENCODE
Q719–Q721 DOLBY CONTROL
IC730 MECHANISM CONTROL
IC730
TC9180N
DOOR IND. UNIT
SYSTEM CONTROL
IC720
PD3185B
IC740
RAM
CXK1011P
IC750 TA7288P
O/C, LD MOTOR DRIVER
Q731–Q736 BUFFER
Q737, Q738, Q740 SPEED CONTROL
Q739 L SPEED SW
RYM1119
RYM112
IC520, IC530, IC540, Q504 REGULATOR
NJM78M12FA
IC520
IC530
NJM78M12FA
TRANSISTOR B UNIT
Q501–Q503, Q505 RESET
SW UNIT(1)
TIMER SW
S902
RSH1011
T.PLAY
OFF
T.REC
S903
O/C SW
RSG1034
S901
CASSETTE RETURN SW
RSG1034
TEST MODE
JP701
JP702
TEST.M
REMOTER CONTROL
ENCODER
LDM
O/CM
SW UNIT (2)
CARRIER UNIT
UPPER UNIT
BOTTOM UNIT
CONNECTOR UNIT
Q851 SENSING
Q857 RM SPEED CONTROL
Q852, Q853 SOL DRIVE
PLAY BACK SIGNAL
RECORDING SIGNAL

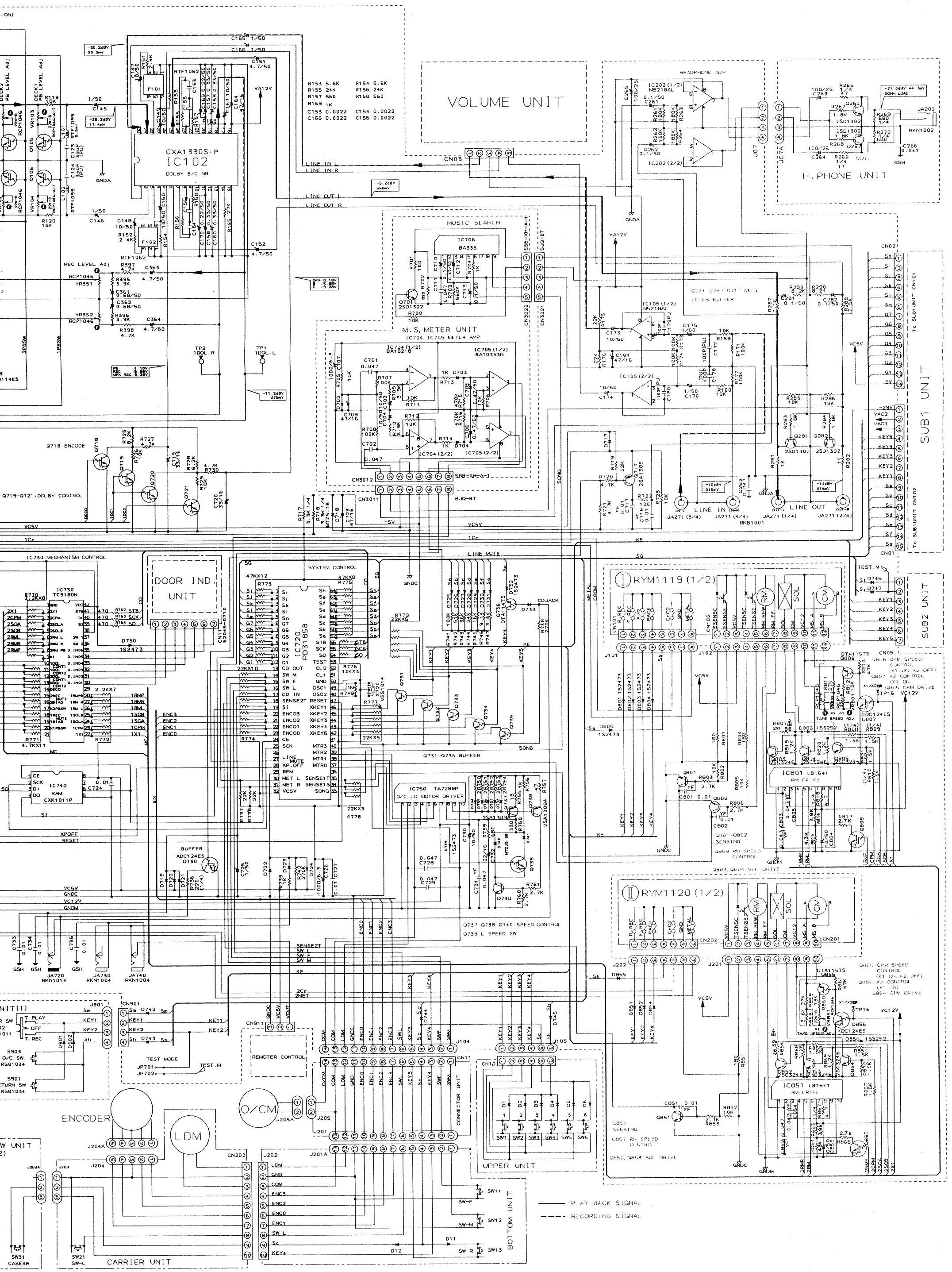
VOLUME UNIT
H. PHONE UNIT
CXA1330S-P
IC102
DOLBY B/C NR
MUSIC SEARCH
IC706
BA335
M.S. METER UNIT
IC704, IC705 METER AMP
IC105 BUFFER
HEADPHONE AMP
LINE IN
LINE OUT
SUB1 UNIT
SUB2 UNIT
To SUB1UNIT CN101
To SUB1UNIT CN102
Q718 ENCODE
Q719–Q721 DOLBY CONTROL
IC730 MECHANISM CONTROL
IC730
TC9180N
DOOR IND. UNIT
SYSTEM CONTROL
IC720
PD31858
Q731–Q736 BUFFER
IC750 TA7288P
O/C, LD MOTOR DRIVER
Q737, Q738, Q740 SPEED CONTROL
Q739 L SPEED SW
RYM1119 (1/2)
RYM1120 (1/2)
IC801 LB1641
RM DRIVE
IC851 LB1641
RM DRIVE
Q801–Q802 SENSING
Q808 RM SPEED CONTROL
Q903, Q904 SOL DRIVE
Q851 SENSING
Q857 RM SPEED CONTROL
Q852, Q853 SOL DRIVE
REMOTER CONTROL
TEST MODE
ENCODER
LDM
O/CM
CONNECTOR UNIT
UPPER UNIT
BOTTOM UNIT
CARRIER UNIT
PLAY BACK SIGNAL
RECORDING SIGNAL

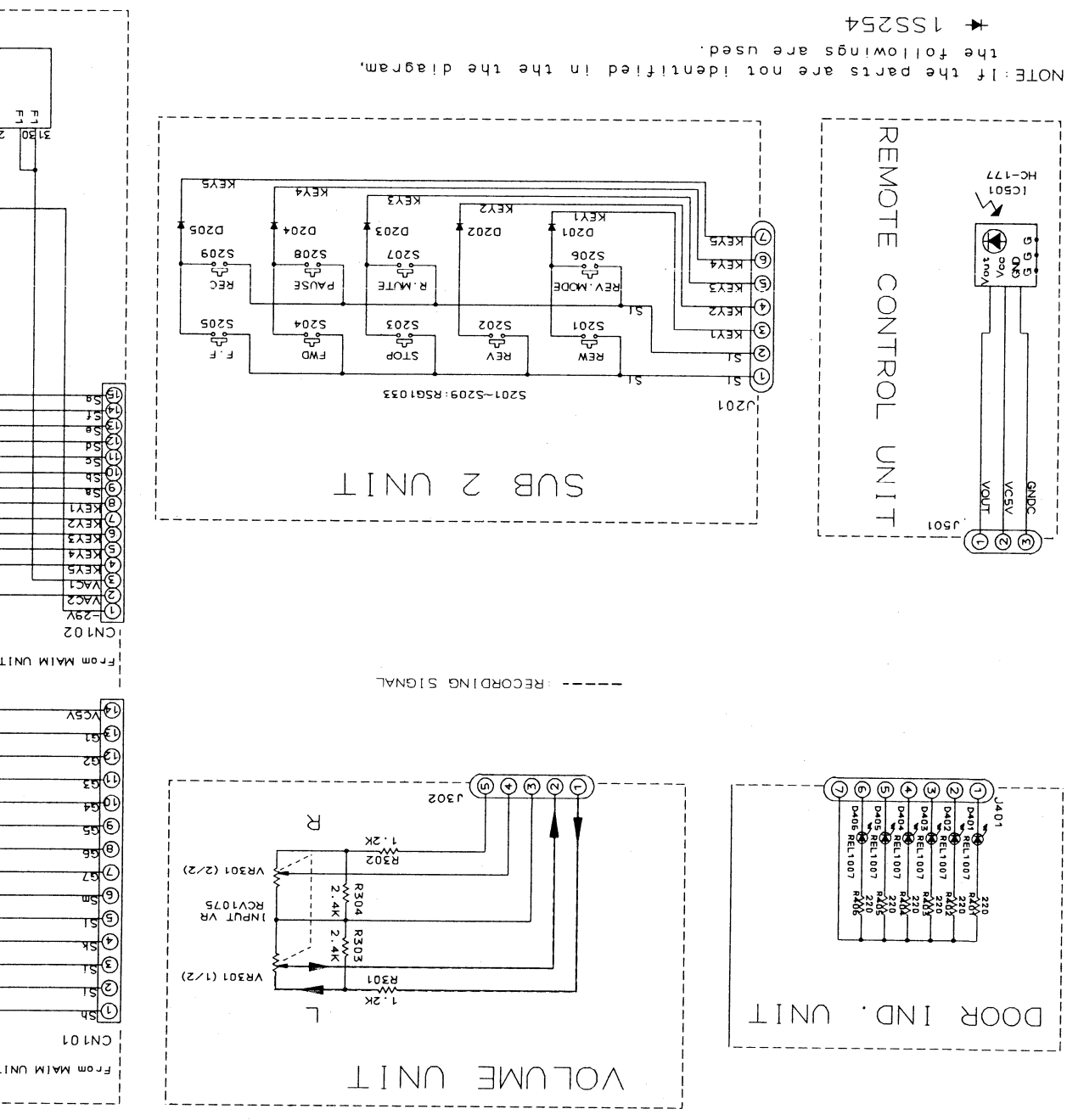

RESISTORS :
Indicated in Ω, 1/4W, 1/6W, ±5% tolerance unless otherwise noted k ; kΩ, M ; MΩ, (F) ; ±1%, (G) ; ±2%, (K) ; ±10%, (M) ; ±20% tolerance.

CAPACITORS :
Indicated in capacity (μF) /voltage (V) unless otherwise noted p ; pF.
Indication without voltage is 50V except electrolytic capacitor.

VOLTAGE CURRENT :
[ ] ; DC voltage (V) at no input signal.
mA ; DC current at no input signal.

OTHERS :
→ ; Signal route.
⊘ ; Adjusting point.
The ⚠ mark found on some component parts indicates the importance of the safety factor of the part. Therefore, when replacing, be sure to use parts of identical designation.
※ marked capacitors and resistors have parts numbers.

This is the basic schematic diagram, but the actual circuit may vary due to improvements in design.

5. SWITCHES (Underline indicates switch position)

POWER UNIT
S1001 : ON – OFF

SUB 1 UNIT
S101 : HI – SPEED
S102 : 4
S103 : 3
S104 : 2
S105 : 1
S106 : 5
S107 : C. MODE
S108 : C. RESET
S109 : OFF/B/C
S110 : DOL. MEMO
S111 : F. F
S112 : FWD
S113 : STOP
S114 : REV
S115 : REW
S116 : 6
S117 : REC
S118 : PAUSE
S119 : R. MUTE
S120 : CD. SYNC
S121 : NOR. COPY
S122 : EDIT
S123 : RELAY

SUB 2 UNIT
S201 : REW
S202 : REV
S203 : STOP
S204 : FWD
S205 : F. F
S206 : REV. MODE
S207 : R. MUTE
S208 : PAUSE
S209 : REC

SW UNIT
S901 : TIMER PLAY – OFF – REC
S902 : O/C
S903 : CASSETTE RETURN

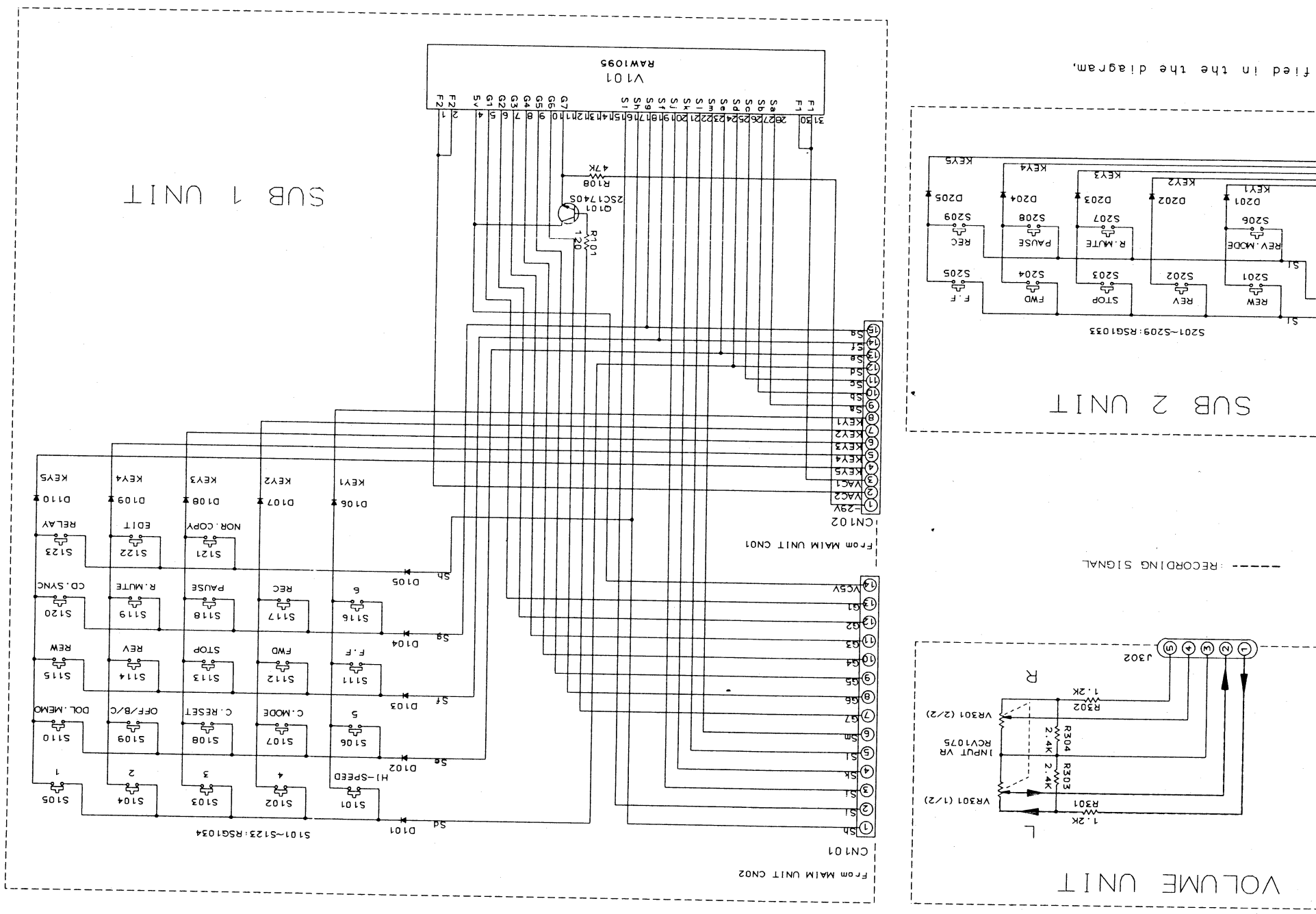

1. RESISTORS :
   Indicated in Ω, 1/4W, 1/6W, ±5% tolerance unless otherwi
   noted k ; kΩ, M ; MΩ, (F) ; ±1%, (G) ; ±2%, (K) ; ±10
   (M) ; ±20% tolerance.

2. CAPACITORS :
   Indicated in capacity (μF) /voltage (V) unless otherwise not
   p ; pF.
   Indication without voltage is 50V except electrolytic capacitor.

3. VOLTAGE CURRENT :
   ; DC voltage (V) at no input signal.
   ⬅mA ; DC current at no input signal.

4. OTHERS :
   ➡ ; Signal route.
   ⊘ ; Adjusting point.
   The ⚠ mark found on some component parts indicates th
   importance of the safety factor of the part. Therefore, whe
   replacing, be sure to use parts of identical designation.
   ※ marked capacitors and resistors have parts numbers.

   This is the basic schematic diagram, but the actual circuit ma
   vary due to improvements in design.

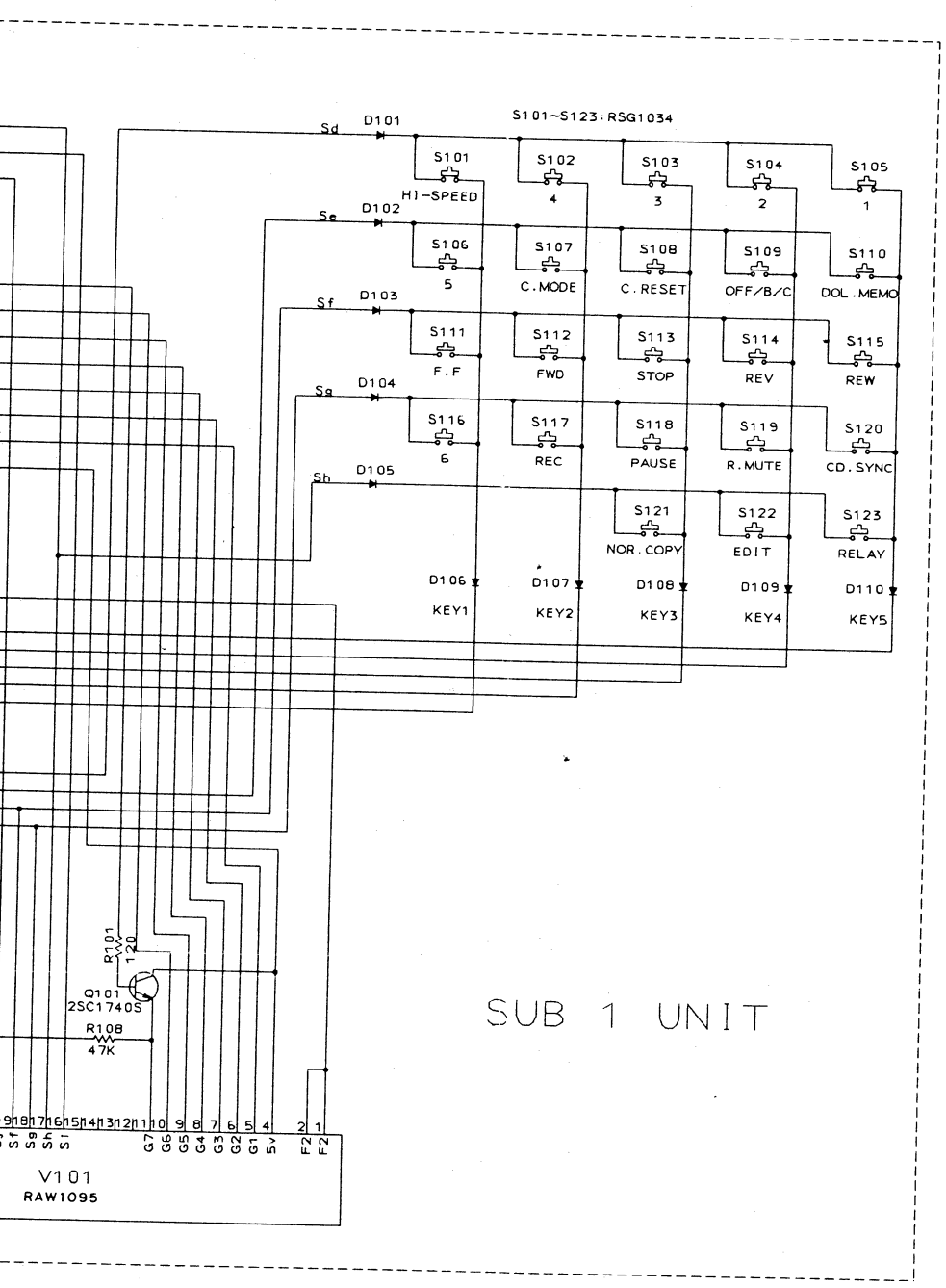
S101~S123:RSG1034
Sd
D101
S101
HI-SPEED
S102
4
S103
3
S104
2
S105
1
Se
D102
S106
5
S107
C.MODE
S108
C.RESET
S109
OFF/B/C
S110
DOL.MEMO
Sf
D103
S111
F.F
S112
FWD
S113
STOP
S114
REV
S115
REW
Sg
D104
S116
6
S117
REC
S118
PAUSE
S119
R.MUTE
S120
CD.SYNC
Sh
D105
S121
NOR.COPY
S122
EDIT
S123
RELAY
D106
KEY1
D107
KEY2
D108
KEY3
D109
KEY4
D110
KEY5
R101
120
Q101
2SC1740S
R108
47K
V101
RAW1095
SUB 1 UNIT

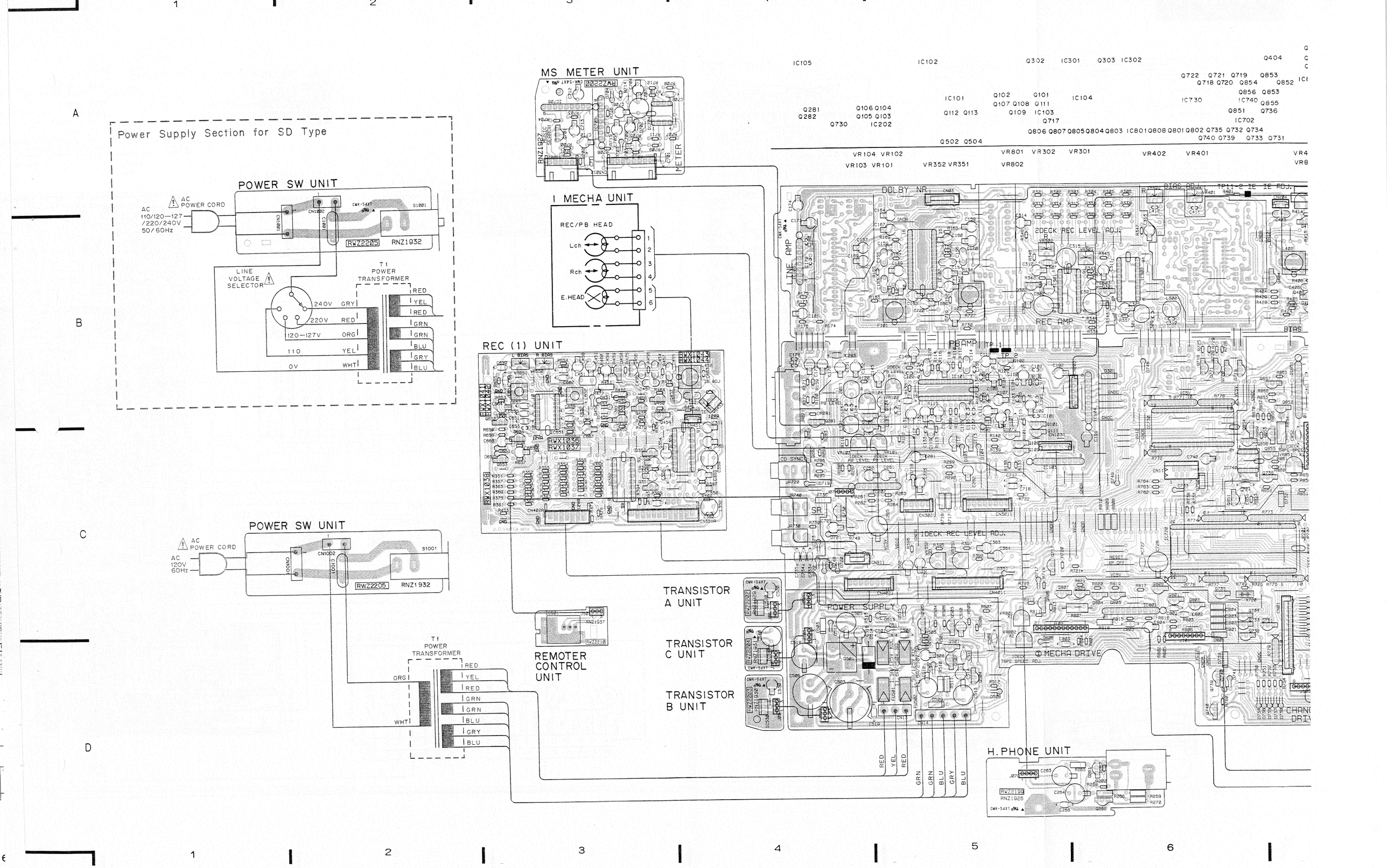
Power Supply Section for SD Type
POWER SW UNIT
AC POWER CORD
AC 110/120—127 /220/240V 50/60Hz
RWZ2205
RNZ1932
LINE VOLTAGE SELECTOR
T1 POWER TRANSFORMER
240V GRY
220V RED
120—127V ORG
110 YEL
0V WHT
RED
YEL
RED
GRN
GRN
BLU
GRY
BLU
MS METER UNIT
I MECHA UNIT
REC/PB HEAD
Lch
Rch
E.HEAD
REC (1) UNIT
POWER SW UNIT
AC POWER CORD
AC 120V 60Hz
T1 POWER TRANSFORMER
ORG
WHT
REMOTER CONTROL UNIT
TRANSISTOR A UNIT
TRANSISTOR C UNIT
TRANSISTOR B UNIT
DOLBY NR
LINE AMP
REC AMP
PB AMP
2DECK REC LEVEL ADJ.
1DECK REC LEVEL ADJ.
POWER SUPPLY
MECHA DRIVE
H.PHONE UNIT
RWZ2198
RNZ1926

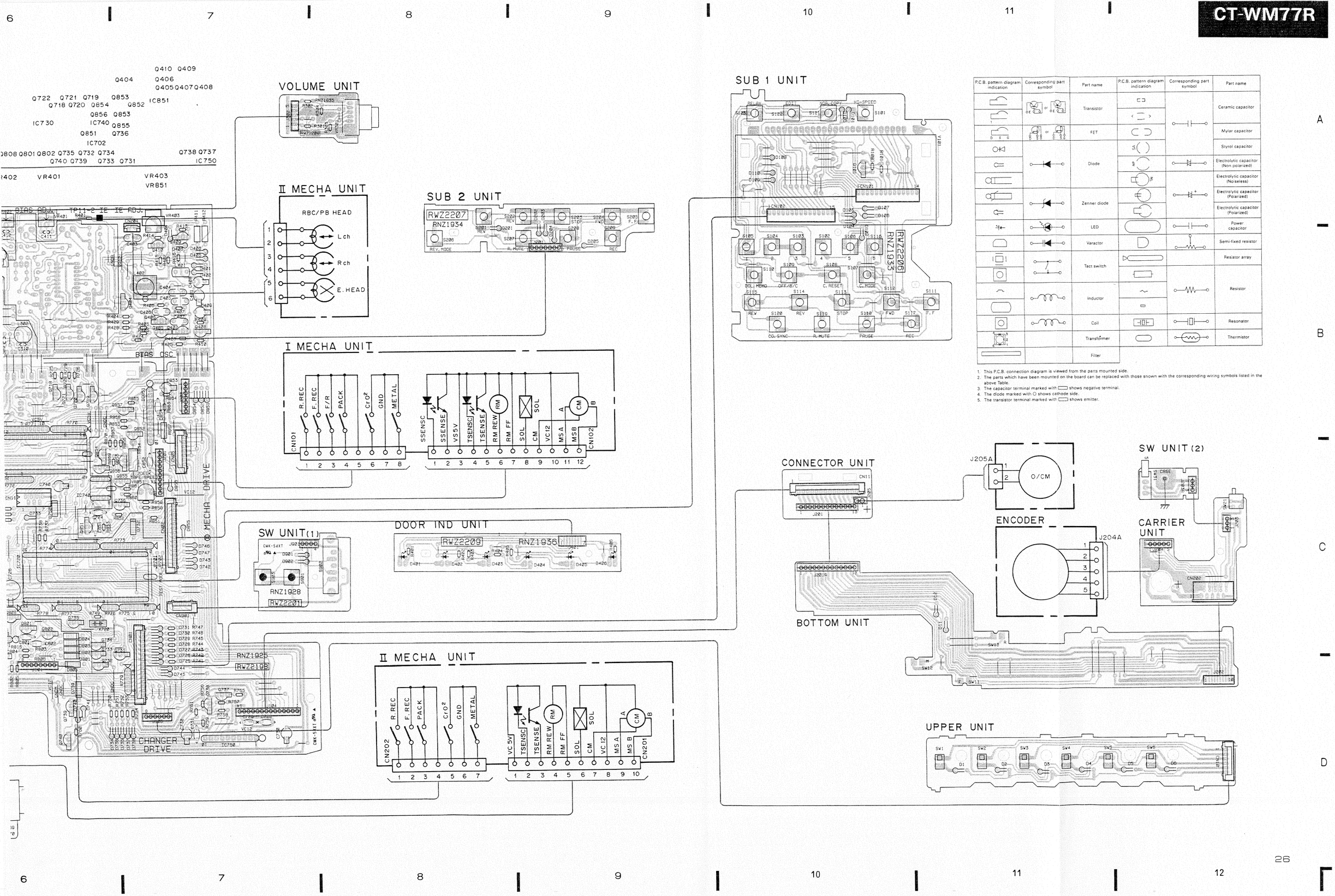

P.C.B. pattern diagram indication	Corresponding part symbol	Part name	P.C.B. pattern diagram indication	Corresponding part symbol	Part name
		Transistor			Ceramic capacitor
		FET			Mylar capacitor
		Diode			Styrol capacitor
					Electrolytic capacitor (Non polarized)
					Electrolytic capacitor (Noiseless)
		Zenner diode			Electrolytic capacitor (Polarized)
					Electrolytic capacitor (Polarized)
		LED			Power capacitor
		Varactor			Semi-fixed resistor
		Tact switch			Resistor array
		Inductor			Resistor
		Coil			Resonator
		Transformer			Thermistor
		Filter			

1. This P.C.B. connection diagram is viewed from the parts mounted side.
2. The parts which have been mounted on the board can be replaced with those shown with the corresponding wiring symbols listed in the above Table.
3. The capacitor terminal marked with ▭ shows negative terminal.
4. The diode marked with O shows cathode side.
5. The transistor terminal marked with ▭ shows emitter.

CT-WM777R

- View from soldering side

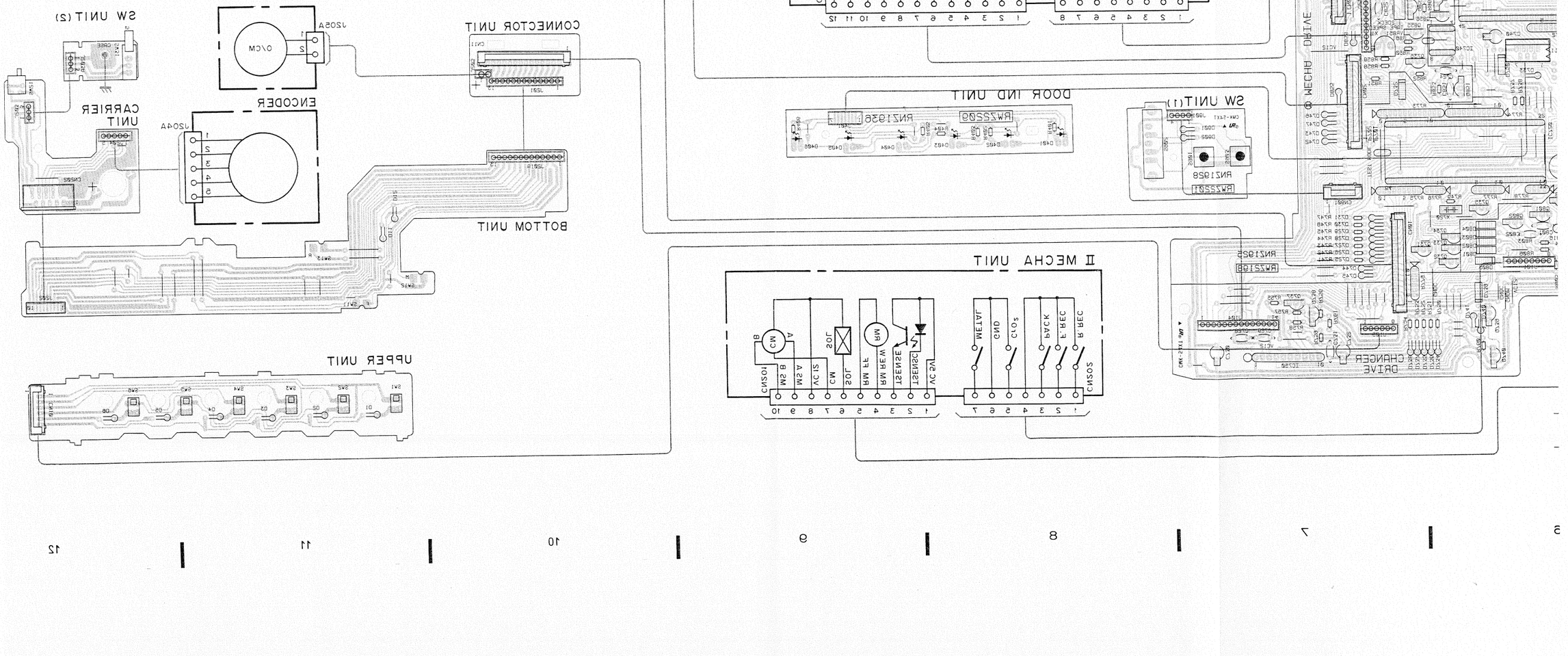

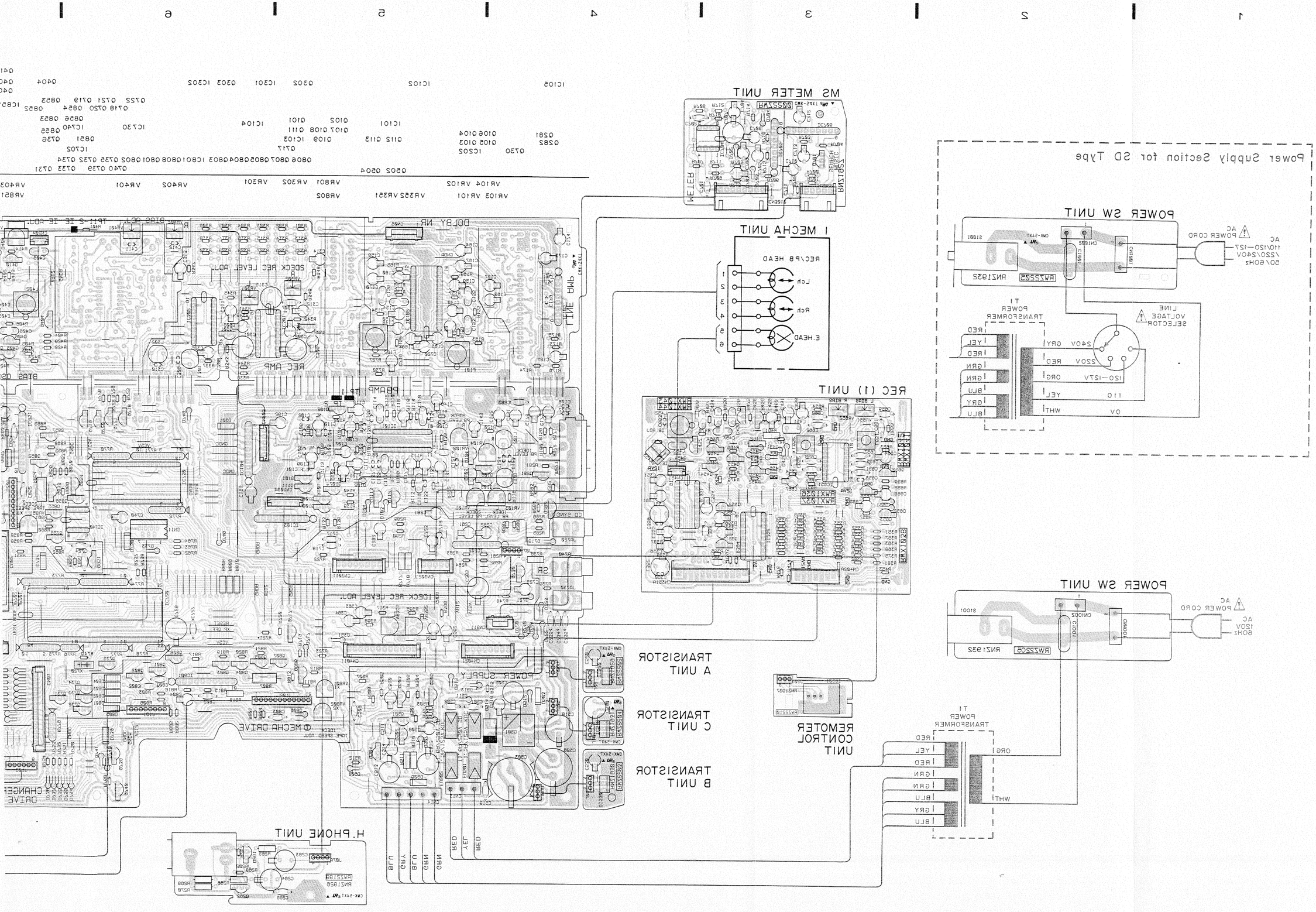
MS METER UNIT
I MECHA UNIT
REC/PB HEAD
Lch
Rch
E.HEAD
REC (1) UNIT
POWER SW UNIT
AC POWER CORD
AC 110/120-127V 220/240V 50/60Hz
LINE VOLTAGE SELECTOR
POWER TRANSFORMER
240V
220V
120-127V
110
0V
GRY
RED
ORG
YEL
WHT
BLU
GRN
Power Supply Section for SD Type
TRANSISTOR A UNIT
TRANSISTOR C UNIT
TRANSISTOR B UNIT
REMOTER CONTROL UNIT
H.PHONE UNIT
DOLBY NR
REC AMP
PB AMP
POWER SUPPLY
MECHA DRIVE
DECK REC LEVEL ADJ.
CHANGER DRIVE

7. BLOCK DIAGRAM

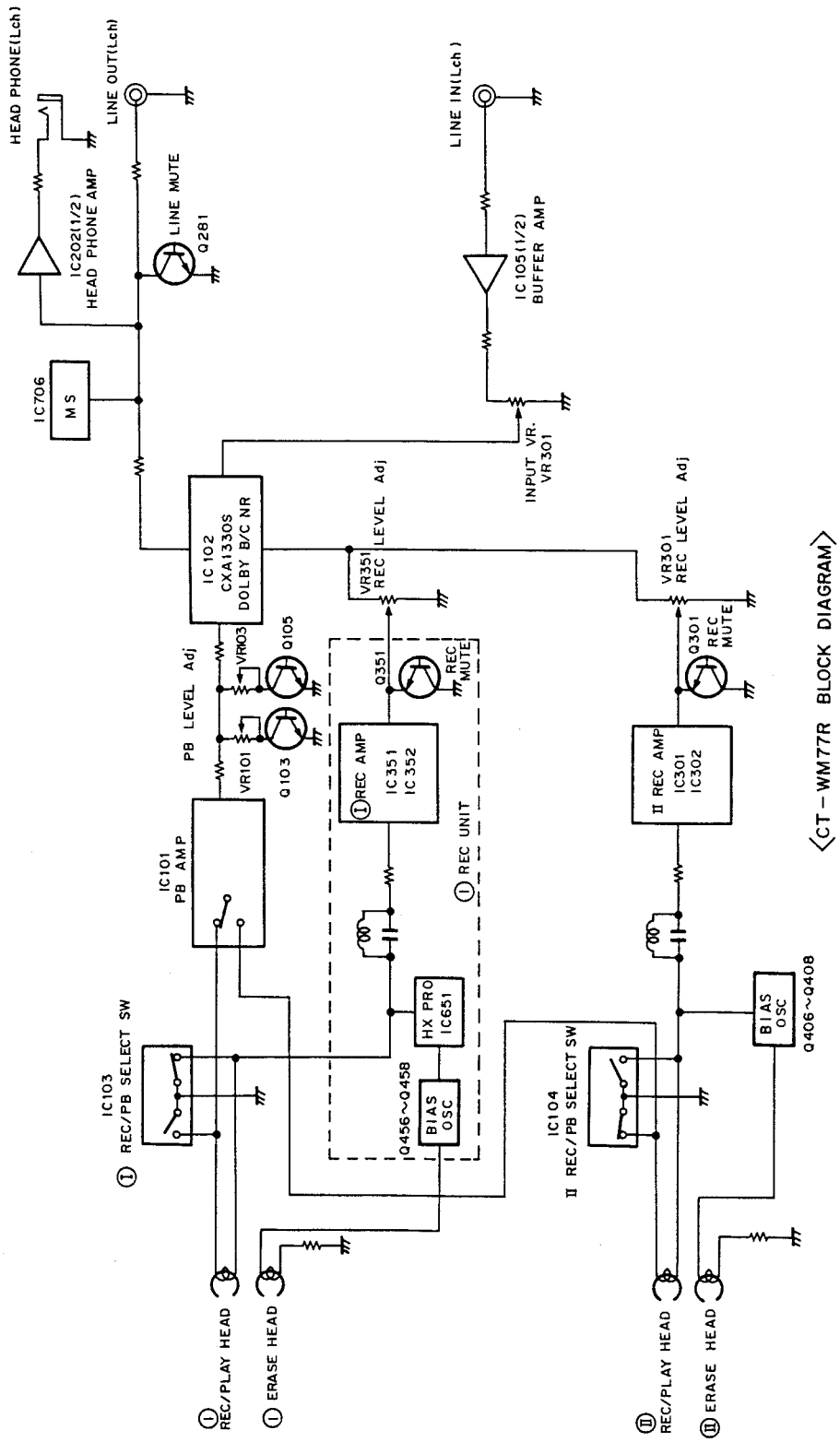

8. P.C.B's PARTS LIST

NOTES:

- Parts without part number cannot be supplied.
- Parts marked by "⊙" are not always kept in stock. Their delivery time may be longer than usual or they may be unavailable.
- The ⚠ mark found on some component parts indicates the importance of the safety factor of the part. Therefore, when replacing, be sure to use parts of identical designation.
- When ordering resistors, first convert resistance values into code form as shown in the following examples.

Ex.1 When there are 2 effective digits (any digit apart from 0), such as 560 ohm and 47k ohm (tolerance is shown by J=5%, and K=10%)

560 Ω → 56 × 10^1 → 561 ····· RD1/4PS 5 6 1 J
47k Ω → 47 × 10^3 → 473 ····· RD1/4PS 4 7 3 J
0.5 Ω → 0R5 ····· RN2H 0 R 5 K
1 Ω → 010 ····· RS1P 0 1 0 K

Ex.2 When there are 3 effective digits (such as in high precision metal film resistors).

5.62k Ω → 562 × 10^1 → 5621 ····· RN1/4SR 5 6 2 1 F

MAIN UNIT

SEMICONDUCTORS

Mark	No.	Description	Part No.
	IC101	PB-EQ AMP IC	CXA1115BP
	IC102	DOLBY B/C IC	CXA1330S
	IC103, 104	IC	BA3126N
	IC105	OP-AMP, IC	M5218AL
	IC202	OP-AMP, IC	M5218AL
	IC301	REC EQUALIZER IC	CXA1198AP
	IC302	LOGIC IC	MC14051B
	IC720	CPU	PD3185B
	IC730	IC	TC9180N
	IC740	MEMORY IC	CXK1011P
	IC750	MOTOR DRIVER IC	TA7288P
	IC801		LB1641
	IC851		LB1641
	Q101, 102	DIGITAL TRANSISTOR	XDC124ES
	Q103-106	DIGITAL TRANSISTOR	XDC114ES
	Q107-109	DIGITAL TRANSISTOR	XDC124ES
	Q111	DIGITAL TRANSISTOR	XDC124ES
	Q112, 113	DIGITAL TRANSISTOR	XDA114ES
	Q281, 282	TRANSISTOR	2SD1302
	Q301, 302	TRANSISTOR	2SC1740S
	Q404, 405	TRANSISTOR	2SC1740S
	Q406, 407	TRANSISTOR	2SC3243
	Q408	TRANSISTOR	2SC3246
	Q409, 410	TRANSISTOR	2SB1238X
	Q501, 502	TRANSISTOR	2SD1302
	Q503	DIGITAL TRANSISTOR	XDC144ES
⚠	Q504	TRANSISTOR	2SA1283
	Q505	TRANSISTOR	2SC1740S
	Q717	TRANSISTOR	2SA1309A
	Q718-721	DIGITAL TRANSISTOR	XDC114ES
	Q730	DIGITAL TRANSISTOR	XDC124ES
	Q731-735	DIGITAL TRANSISTOR	DTC114TS
	Q736	DIGITAL TRANSISTOR	DTA114TS
	Q737, 738	TRANSISTOR	2SA1309A
	Q739	DIGITAL TRANSISTOR	XDC114ES
	Q740	TRANSISTOR	2SC1740S
	Q801, 802	TRANSISTOR	2SC1740S
	Q803-805	TRANSISTOR	2SC3246
	Q806	DIGITAL TRANSISTOR	DTA115TS
	Q807	TRANSISTOR	XDC124ES
	Q808	DIGITAL TRANSISTOR	XDC114ES
	Q851	TRANSISTOR	2SC1740S
	Q852-854	TRANSISTOR	2SC3246
	Q855	DIGITAL TRANSISTOR	DTA115TS
	Q856	TRANSISTOR	XDC124ES
	Q857	DIGITAL TRANSISTOR	XDC114ES
	D101-104	DIODE	1SS254
	D301	DIODE	1S2473
	D351	DIODE	1SS254
	D401	DIODE	1SS254
	D402	DIODE	1SS252
	D403-406	DIODE	1SS254
⚠	D501		S2VB20
⚠	D503	RECTIFIER DIODE	1SR35-100A
	D506	DIODE	1SS254
⚠	D507	ZENER DIODE	MTZJ30B
⚠	D508	ZENER DIODE	MTZJ4. 7B
⚠	D509	RECTIFIER DIODE	1SR35-100A
	D511, 512	DIODE	1SS254
	D513	ZENER DIODE	MTZ3. 6B
⚠	D514	RECTIFIER DIODE	S3V20
	D515	DIODE	1SS254
	D717	DIODE	1SS254
	D718	ZENER DIODE	MTZ5. 1B
	D719-731	DIODE	1SS254
	D732	DIODE	1S2473
	D733-738	DIODE	1SS254
	D739	DIODE	1S2473
	D740	ZENER DIODE	MTZJ3. 3B
	D741-749	DIODE	1SS254
	D750	DIODE	1S2473
	D801-805	DIODE	1S2473
	D806	DIODE	1SS252

Mark	No.	Description	Part No.
	D851, 852	DIODE	1SS254
	D854, 855	DIODE	1SS254
	D856	DIODE	1SS252
COILS/TRANSFORMERS			
	L101, 102	COIL	RTF1099
	L301, 302	COIL	RTF1004
	L401	RADIAL INDUCTOR	LFA121K
	L402		RTD1042
	F101, 102	FILTER	RTF1062
CAPACITORS			
	C101, 102	AXIAL CAPACITOR	CKPUYB471K50
	C103, 104	CERAMIC CAPACITOR	CKPUYB102K50
	C105, 106	AXIAL CAPACITOR	CKPUYB561K50
	C107-110	ELECTR. CAPACITOR	CEANL100M16
	C111, 112	ELECTR. CAPACITOR	CEAS101M10
	C113, 114	AUDIO FILM CAPACITOR	CFTXA822J50
	C115, 116	CERAMIC CAPACITOR	CKCYF103Z50
	C117, 118	ELECTR. CAPACITOR	CEAS4R7M50
	C119, 120	AUDIO FILM CAPACITOR	CFTXA223J50
	C121, 122	AXIAL CAPACITOR	CKPUYB221K50
	C123, 124	AXIAL CAPACITOR	CKPUYB391K50
	C131, 132	ELECTR. CAPACITOR	CEAS470M16
	C133, 134	AXIAL CAPACITOR	CKPUYB681K50
	C135-138	AXIAL CAPACITOR	CKPUYB101K50
	C145, 146	ELECTR. CAPACITOR	CEAS010M50
	C147-150	ELECTR. CAPACITOR	CEAS100M50
	C151, 152	ELECTR. CAPACITOR	CEAS4R7M50
	C153-156	AUDIO FILM CAPACITOR	CFTXA222J50
	C157-160	ELECTR. CAPACITOR	CEASR33M50
	C164	ELECTR. CAPACITOR	CEAS470M16
	C165, 166	ELECTR. CAPACITOR	CEAS010M50
	C167	ELECTR. CAPACITOR	CEAS100M50
	C169, 170	ELECTR. CAPACITOR	CEASR22M50
	C173, 174	ELECTR. CAPACITOR	CEAS100M50
	C175, 176	ELECTR. CAPACITOR	CEAS010M50
	C177-180	AXIAL CAPACITOR	CKPUYB101K50
	C181	ELECTR. CAPACITOR	CEAS470M16
	C191, 192	ELECTR. CAPACITOR	CEAS470M16
	C261, 262	ELECTR. CAPACITOR	CEASR10M50
	C265	ELECTR. CAPACITOR	CEAS101M25
	C281, 282	ELECTR. CAPACITOR	CEASR10M50
	C283	CERAMIC CAPACITOR	CKCYF473Z50
	C301, 302	ELECTR. CAPACITOR	CEAS471M10
	C303-306	ELECTR. CAPACITOR	CEAS4R7M50
	C307	CERAMIC CAPACITOR	CKCYF473Z50
	C308	CERAMIC CAPACITOR	CKCYF103Z50
	C309, 310	AXIAL CAPACITOR	CKPUYB221K50
	C311, 312	ELECTR. CAPACITOR	CEASR68M50
	C313, 314	ELECTR. CAPACITOR	CEAS4R7M50
	C315	ELECTR. CAPACITOR	CEAS331M16
	C361, 362	ELECTR. CAPACITOR	CEASR68M50
	C363, 364	ELECTR. CAPACITOR	CEAS4R7M50
	C401	ELECTR. CAPACITOR	CEAS330M35
	C403	CAPACITOR	CQPA752J100
	C404	AUDIO FILM CAPACITOR	CFTXA223J50
	C405	AUDIO FILM CAPACITOR	CFTXA472J50
	C406, 407	AUDIO FILM CAPACITOR	CFTXA332J50
	C408	ELECTR. CAPACITOR	CEAS330M35
	C409	ELECTR. CAPACITOR	CEAS100M50
	C411, 412	CERAMIC CAPACITOR	CCCSL101K500
	C501, 502	CERAMIC CAPACITOR	CKCYF473Z50
	C503	ELECTR. CAPACITOR	CEAS332M35
	C505	ELECTR. CAPACITOR	CEAS471M16
	C506	ELECTR. CAPACITOR	CEAS472M16
	C508	ELECTR. CAPACITOR	CEAS4R7M50
	C509	CERAMIC CAPACITOR	CKCYF103Z50
	C510	ELECTR. CAPACITOR	CEAS4R7M50
	C511	CERAMIC CAPACITOR	CKCYF103Z50
	C512	ELECTR. CAPACITOR	CEAS101M50
	C513	ELECTR. CAPACITOR	CEAS221M35
	C514	ELECTR. CAPACITOR	CEAS470M50
	C516	ELECTR. CAPACITOR	CEAS010M50
	C518	ELECTR. CAPACITOR	CEAS102M35
	C519	CERAMIC CAPACITOR	CKCYF473Z50
	C717, 718	CERAMIC CAPACITOR	CKCYF103Z50
	C719, 720	ELECTR. CAPACITOR	CEAS330M16
	C723	ELECTR. CAPACITOR	CEAS470M16
	C724	CERAMIC CAPACITOR	CKCYF103Z50
	C725	ELECTR. CAPACITOR	CEAS010M50
	C726	ELECTR. CAPACITOR	CEAS102M6R3
	C727	CERAMIC CAPACITOR	CKCYF103Z50
	C728, 729	CERAMIC CAPACITOR	CKCYF473Z50
	C730	ELECTR. CAPACITOR	CEAS100M50
	C731	CERAMIC CAPACITOR	CKCYF473Z50
	C732	ELECTR. CAPACITOR	CEAS220M16
	C733-735	CERAMIC CAPACITOR	CKCYF103Z50
	C740	ELECTR. CAPACITOR	CEAS331M6R3
	C801, 802	CERAMIC CAPACITOR	CKCYF103Z50
	C803	CERAMIC CAPACITOR	CKCYF473Z50
	C804	ELECTR. CAPACITOR	CEAS100M50
	C805	CERAMIC CAPACITOR	CKCYF473Z50
	C851	CERAMIC CAPACITOR	CKCYF103Z50
	C852	CERAMIC CAPACITOR	CKCYF473Z50
	C853	ELECTR. CAPACITOR	CEAS100M50
	C854	CERAMIC CAPACITOR	CKCYF473Z50
RESISTORS			
	R101-122	CARBONFILM RESISTOR	RD1/6PM□□□J
	R133	CARBONFILM RESISTOR	RD1/6PM□□□J
	R135, 136	CARBONFILM RESISTOR	RD1/6PM□□□J
	R139, 140	CARBONFILM RESISTOR	RD1/6PM□□□J
	R151-160	CARBONFILM RESISTOR	RD1/6PM□□□J
	R165	CARBONFILM RESISTOR	RD1/6PM□□□J
	R169	CARBONFILM RESISTOR	RD1/6PM□□□J
	R171-176	CARBONFILM RESISTOR	RD1/6PM□□□J
	R261-264	CARBONFILM RESISTOR	RD1/6PM□□□J
	R281-290	CARBONFILM RESISTOR	RD1/6PM□□□J
	R301-306	CARBONFILM RESISTOR	RD1/6PM□□□J
	R313-318	CARBONFILM RESISTOR	RD1/6PM□□□J

Mark	No.	Description	Part No.
	R325-330	CARBONFILM RESISTOR	RD1/6PM□□□J
	R337, 338	CARBONFILM RESISTOR	RD1/6PM□□□J
	R341-349	CARBONFILM RESISTOR	RD1/6PM□□□J
	R395-398	CARBONFILM RESISTOR	RD1/6PM□□□J
	R401	CARBONFILM RESISTOR	RD1/2LF□□□J
	R402-407	CARBONFILM RESISTOR	RD1/6PM□□□J
	R409, 410	CARBONFILM RESISTOR	RD1/6PM□□□J
	R411, 412	CARBONFILM RESISTOR	RD1/2PM□□□J
	R413-416	CARBONFILM RESISTOR	RD1/6PM□□□J
	R424-426	CARBONFILM RESISTOR	RD1/6PM□□□J
	R428, 429	CARBONFILM RESISTOR	RD1/6PM□□□J
	R501-508	CARBONFILM RESISTOR	RD1/6PM□□□J
⚠	R510	CARBONFILM RESISTOR	RD1/4PM□□□J
⚠	R511	CARBONFILM RESISTOR	RD1/2PMF□□□J
	R512, 513	CARBONFILM RESISTOR	RD1/6PM□□□J
	R717, 718	CARBONFILM RESISTOR	RD1/4PM□□□J
	R719-723	CARBONFILM RESISTOR	RD1/6PM□□□J
	R725-730	CARBONFILM RESISTOR	RD1/6PM□□□J
	R736	CARBONFILM RESISTOR	RD1/4PM□□□J
	R737-764	CARBONFILM RESISTOR	RD1/6PM□□□J
	R770	RESISTOR ARRAY (10K)	RA8T□□□J
	R771	RESISTOR ARRAY(4.7K)	RA11T□□□J
	R772	RESISTOR ARRAY(2.2K)	RA7T□□□J
	R773	RESISTOR ARRAY (47K)	RA12T□□□J
	R774	RESISTOR ARRAY(100K)	RA10T□□□J
	R775	RESISTOR ARRAY (2.2K)	RA8T□□□J
	R776	RESISTOR ARRAY 10K	RA3T□□□J
	R777	RESISTOR ARRAY (22K)	RA5T□□□J
	R778	RESISTOR ARRAY (22K)	RA3T□□□J
	R779	RESISTOR ARRAY (22K)	RA5T□□□J
	R801-806	CARBONFILM RESISTOR	RD1/6PM□□□J
⚠	R807	METAL OXIDE RESISTOR	RS2LMF□□□J
	R808-810	CARBONFILM RESISTOR	RD1/4PM□□□J
	R811-813	CARBONFILM RESISTOR	RD1/6PM□□□J
	R815-817	CARBONFILM RESISTOR	RD1/6PM□□□J
	R818	CARBONFILM RESISTOR	RD1/4PM□□□J
	R819-821	CARBONFILM RESISTOR	RD1/6PM□□□J
	R851-853	CARBONFILM RESISTOR	RD1/6PM□□□J
⚠	R854	METAL OXIDE RESISTOR	RS2LMF□□□J
	R855-861	CARBONFILM RESISTOR	RD1/6PM□□□J
	R863-865	CARBONFILM RESISTOR	RD1/6PM□□□J
	R867	CARBONFILM RESISTOR	RD1/4PM□□□J
	R868-870	CARBONFILM RESISTOR	RD1/6PM□□□J
	VR101-104	VR(22kΩ)	RCP1046
	VR301, 302	VR(22kΩ)	RCP1084
	VR351, 352	VR(22kΩ)	RCP1046
	VR401, 402	VR(100kΩ)	RCP1087
	VR403	VARIABLE RESISTOR(100Ω)	RCP1013
	VR801	VR(22kΩ)	RCP1046
	VR802	VR(10kΩ)	RCP1045
	VR851	VR(22kΩ)	RCP1046

OTHERS

	CN11		52045-0710
	CN3011		8JQ-BT
	CN3021		5JQ-BT
	CN4011		12JQ-BT
	CN4021		8JQ-BT
	JA271	JACK	RKB1001
	JA720	JACK	RKN1014
	JA730	JACK	RKN1004
	JA740	JACK	RKN1004
	X720	CERAMIC RESONATOR	VSS1014

H.PHONE UNIT

SEMICONDUCTORS

	Q261, 262	TRANSISTOR	2SD1302

CAPACITORS

	C263, 264	ELECTR. CAPACITOR	CEAS101M25
	C266	CERAMIC CAPACITOR	CKCYF473Z50

RESISTORS

	R265, 266	CARBONFILM RESISTOR	RD1/4PM□□□J
	R267, 268	CARBONFILM RESISTOR	RD1/6PM□□□J
	R269, 270	CARBONFILM RESISTOR	RD1/4PM□□□J

OTHERS

	JA202	JACK	RKN1002

M.S, METER UNIT

SEMICONDUCTORS

	IC704	OP-AMP IC	BA15218
	IC705	COMPARATOR	BA10393N
	IC706	IC	BA335
	Q701	TRANSISTOR	2SD1302
	D702-704	DIODE	1SS254

CAPACITORS

	C701, 702	CERAMIC CAPACITOR	CKCYF473Z50
	C703, 704	ELECTR. CAPACITOR	CEAS100M50
	C705, 706	ELECTR. CAPACITOR	CEASR47M50
	C707	ELECTR. CAPACITOR	CEAS102M6R3
	C709	ELECTR. CAPACITOR	CEAS470M16
	C710	ELECTR. CAPACITOR	CEASR10M50
	C711	CERAMIC CAPACITOR	CKCYF473Z50
	C712	ELECTR. CAPACITOR	CEASR47M50
	C713	ELECTR. CAPACITOR	CEASR10M50

RESISTORS

	R700-716	CARBONFILM RESISTOR	RD1/6PM□□□J

OTHERS

	CN3012		S8B-XH-A-1
	CN3022		S5B-XH-A-1

SW UNIT (1)

SEMICONDUCTORS

	D901, 902	DIODE	1SS254

SWITCHES

	S901	SWITCH	RSG1034
	S902	SWITCH	RSH1011
	S903	SWITCH	RSG1034

Mark	No.	Description	Part No.
TRANSISTOR (A) UNIT			
SEMICONDUCTORS			
⚠	IC520	REGULATOR IC	NJM7812FA
CAPACITORS			
	C520	ELECTR. CAPACITOR	CEAS470M16
TRANSISTOR (B) UNIT			
SEMICONDUCTORS			
⚠	IC530	REGULATOR IC	NJM7812FA
CAPACITORS			
	C530	ELECTR. CAPACITOR	CEAS101M25
TRANSISTOR (C) UNIT			
SEMICONDUCTORS			
⚠	IC540	REGULATOR IC	NJM78M05FA
CAPACITORS			
	C540	ELECTR. CAPACITOR	CEAS102M6R3
POWER SW UNIT			
SWITCHES			
⚠	S1001	SWITCH	RSA-063
CAPACITORS			
⚠	C1001	CAPACITOR(10000PF)	RCG-009
SUB (1) UNIT			
SEMICONDUCTORS			
	Q101	TRANSISTOR	2SC1740S
	D101-110	DIODE	1SS254
SWITCHES			
	S101-110	SWITCH	RSG1034
	S111-123	SWITCH	RSG1034
RESISTORS			
	R101	CARBONFILM RESISTOR	RD1/6PM□□□J
	R108	CARBONFILM RESISTOR	RD1/6PM□□□J
OTHERS			
	V101	FL	RAW1095
SUB (2) UNIT			
SEMICONDUCTORS			
	D201-205	DIODE	1SS254
SWITCHES			
	S201-209	SWITCH	RSG1033
REC (1) UNIT			
SEMICONDUCTORS			
	IC351	REC EQUALIZER IC	CXA1198AP
	IC352	LOGIC IC	MC14051B
	IC651	DOLBY HX PRO IC	UPC1297CA
	Q351, 352	TRANSISTOR	2SC3311A
	Q454, 455	TRANSISTOR	2SC3311A
	Q456, 457	TRANSISTOR	2SC3243
	Q458	TRANSISTOR	2SC3246
	Q459, 460	TRANSISTOR	2SB1238X
	Q651, 652	TRANSISTOR	2SA1309A
	Q653	TRANSISTOR	XDC124ES
	D451	DIODE	1SS254
	D452	DIODE	1SS252
	D453-456	DIODE	1SS254
	D651, 652	DIODE	1SS254
COILS/TRANSFORMERS			
	L351, 352	COIL	RTF1004
	L451	RADIAL INDUCTOR	LFA121K
	L452	COIL	RTD1022
	L651, 652	COIL	RTD1046
CAPACITORS			
	C351, 352	ELECTR. CAPACITOR	CEAS471M10
	C353-356	ELECTR. CAPACITOR	CEAS4R7M50
	C357	CERAMIC CAPACITOR	CKCYF473Z50
	C358	CERAMIC CAPACITOR	CKCYF103Z50
	C359, 360	AXIAL CAPACITOR	CKPUYB221K50
	C361	ELECTR. CAPACITOR	CEAS331M16
	C451	ELECTR. CAPACITOR	CEAS330M35
	C453	CAPACITOR	CQPA682J100
	C454	AUDIO FILM CAPACITOR	CFTXA273J50
	C455	AUDIO FILM CAPACITOR	CFTXA682J50
	C456, 457	AUDIO FILM CAPACITOR	CFTXA332J50
	C458	ELECTR. CAPACITOR	CEAS330M35
	C459	ELECTR. CAPACITOR	CEAS100M50
	C651, 652	AUDIO FILM CAPACITOR	CFTXA103J50
	C653, 654	AXIAL CAPACITOR	CKPUYB821K50
	C655, 656	AUDIO FILM CAPACITOR	CFTXA223J50
	C657, 658	CERAMIC CAPACITOR	CGCYX473K25
	C659, 660	CERAMIC CAPACITOR	CCCSL101K500
	C661, 662	CERAMIC CAPACITOR(430P)	RCG1005
	C663	AXIAL CAPACITOR	CKPUYB101K50
	C664	ELECTR. CAPACITOR	CEASR10M50
	C665	ELECTR. CAPACITOR	CEAS100M50
	C666	ELECTR. CAPACITOR	CEAS4R7M50
	C667	ELECTR. CAPACITOR	CEAS100M50
RESISTORS			
	R351-388	CARBONFILM RESISTOR	RD1/6PM□□□J
	R391	CARBONFILM RESISTOR	RD1/6PM□□□J
	R393-396	CARBONFILM RESISTOR	RD1/6PM□□□J
	R451	CARBONFILM RESISTOR	RD1/2LF□□□J
	R452-457	CARBONFILM RESISTOR	RD1/6PM□□□J
	R459, 460	CARBONFILM RESISTOR	RD1/6PM□□□J
	R461, 462	CARBONFILM RESISTOR	RD1/2LF□□□J
	R463-466	CARBONFILM RESISTOR	RD1/6PM□□□J
	R474-479	CARBONFILM RESISTOR	RD1/6PM□□□J
	R651-659	CARBONFILM RESISTOR	RD1/6PM□□□J
	VR453	VARIABLE RESISTOR(100Ω)	RCP1013
	VR651, 652	VR	VRTB6HS223
OTHERS			
	CN351		S12B-XH-A-1

Mark	No.	Description	Part No.
	CN402		S8B-XH-A-1

BOTTOM UNIT

SEMICONDUCTORS

	D11, 12	DIODE	1SS254

UPPER UNIT

SEMICONDUCTORS

	D1-6	DIODE	1SS254

SWITCHES

	S1-6	PUSH SWITCH	DSG1015

CARRIER UNIT

SWITCHES

	S21	PUSH SWITCH	DSG1016

OTHERS

	CN202		5597-10APB

SW UNIT (2)

SWITCHES

	S31		RSK1003

VOLUME UNIT

RESISTORS

	R301-304	CARBONFILM RESISTOR	RD1/6PM□□□J
	VR301	VARIABLE RESISTOR(5kA)	RCV1075

DOOR IND UNIT

SEMICONDUCTORS

	D401-406	LED	REL1007

RESISTORS

	R401-406	CARBONFILM RESISTOR	RD1/6PM□□□J

REMOTE CONTROL UNIT

OTHERS

	REMOTE SENSOR(IC501)		HC-177

CONNECTOR UNIT

There is no supply part in this unit.

9. ADJUSTMENTS

9.1 MECHANICAL ADJUSTMENT

- Perform this adjustment in the test mode.
- TEST mode setting.

Short-circuit the JP701 and JP702 for a moment. (Set into TEST mode.)

Mode	Operation	Display
Side I Double speed play	Press the FAST key (side I) in the side I PLAY mode to set to the double speed PLAY mode. (To transfer to the other modes, press the STOP key first.)	C-1
Side II Double speed play	Press the FAST key (side II) in the side II PLAY mode to set to the double speed PLAY mode. (To transfer to the other modes, press the STOP key first.)	C-2

To cancel the TEST mode, press the side I COUNTER RESET key or turn off the power.

1. Tape Speed Adjustment and Check

No.	Deck	Mode	Test tape	Adjusting points	Specifications/Ratings (playback frequency)	Remarks
1	II	Normal speed PLAY	STD-301 (3 kHz)	After playing back for 1 minute.		
2		Double speed PLAY		check	6000 Hz ±600 Hz	
3		Normal speed PLAY		VR851	3000 Hz ± 5 Hz.	
4	I			After checking, play back deck I.		
5				After playing back for 1 minute.		
6		Double speed PLAY		VR802	Within ±10 Hz against the measurement value of the step 2 (deck II).	
7		Normal speed PLAY		VR801	3000 Hz ±5 Hz	

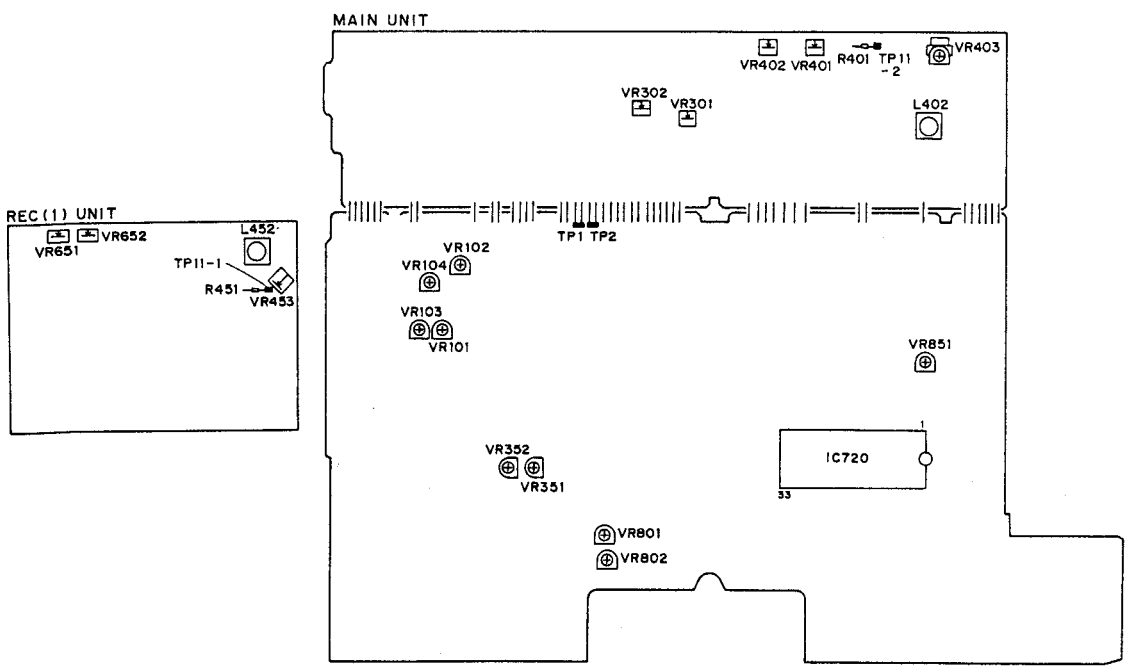

Fig. 9-1 Adjusting points

9.2 ELECTRICAL ADJUSTMENTS

Adjustment Conditions

1. The mechanical adjustments must be completed first.
2. The head must be cleaned and demagnetized.
3. Turn power on allow the deck to warm up for at least a few minutes before commencing any electrical adjustments.
4. The reference signal is 0dBv=1Vrms.
5. Connect a 50 kΩ (or between 47k to 52 kΩ) load resistance to the OUTPUT terminals.
6. Unless otherwise specified, the switches listed below are left in the positions indicated.
   DOLBY NR : OFF
   TAPE SELECTOR : NORM

Test Tapes

STD-331B	: Playback adjustments (See Fig. 9-2)
STD-630	: NORMAL blank tape
STD-620	: CrO_2 blank tape
STD-610	: METAL blank tape

List of Adjustments

Playback sections

1. Head azimuth adjustment.
2. Playback level adjustment.

Recording sections

1. Bias oscillator adjustment.
2. Erase current adjustment.
3. Recording bias adjustment.
4. Recording level adjustment.
5. Level meter check.

NOTE: This unit has an automatic tape selection feature.

Dolby noise reduction and HX Pro headroom extension manufactured under license from Dolby Laboratories Licensing Corporation. HX Pro originated by Bang & Olufsen.
"DOLBY",the double-D symbol DD and "HX PRO"are trademarks of Dolby Laboratories Licensing Corporation.

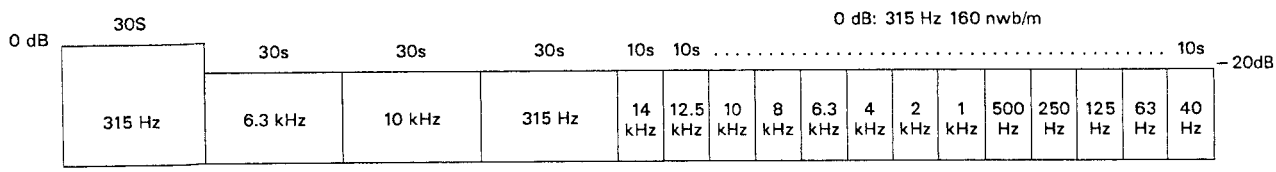

Fig. 9-2 Constants of the test tape STD-331B

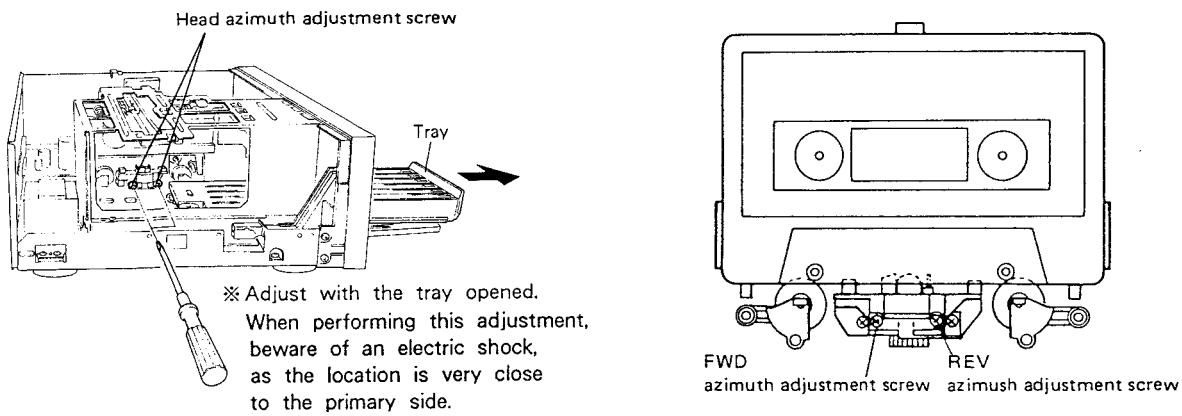

Fig. 9-3 Head azimuth adjustment

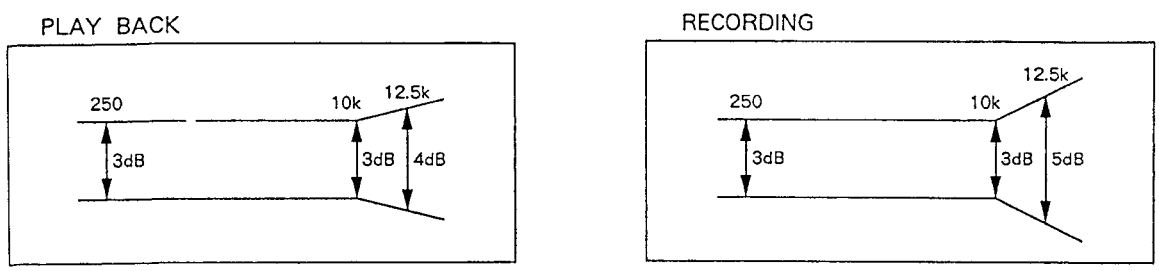

Fig. 9-4 Allowable playback frequency response zone

PLAYBACK SECTION

1. Head Azimuth Adjustment

• Turn VR103, 104 (Deck I) or VR101, 102 (Deck II) to mechanical center positions.

No.	Mode	Input signal & test tape	Adjustment location	Measuring location	Adjustment value	Remarks
1.	PLAY	Play the 10 kHz/−20 dB section of STD-331B test tape.	Head azimuth adjustment screw. (See Fig. 9-3)	LINE OUT	Maximum playback signal level.	
2.	STOP	Lock the screw with screw lock after completing adjustment.				

2. Playback level Adjustment

• This adjustment determines the DOLBY NR level, and must be performed with great care.

No.	Mode	Input signal & test tape	Adjustment location		Measuring location	Adjustment value	Remarks
1.	PLAY	Play the 315 Hz/0 dB section of the STD-331B test tape.	Deck I	VR103 (Lch) VR104 (Rch)	TP. 1 (Lch) TP. 2 (Rch)	−10.7 dBv	
			Deck II	VR101 (Lch) VR102 (Rch)			

RECORDING SECTION

1. Bias Oscillator Adjustment

• Adjust the bias oscillator with checks set to recording mode simultaneously. ← (Double R/P only)

No.	Mode	Input signal & test tape	Adjustment location		Measuring location	Adjustment value	Remarks
1.	REC	Load the STD-610 test tape with no input signal.	Deck I	L452	TP. 11-1	105 kHz±0.3 kHz	

2. Erase Current Adjustment

• Adjust the bias oscillator with decks I and II set to recording mode indenpendently.

No.	Mode	Input signal & test tape	Adjustment location		Measuring location	Adjustment value	Remarks
1.	REC	Load the STD-610 test tape with no input signal.	Deck I	VR453	TP. 11-1	165 mV AC	
			Deck II	VR403	TP. 11-2		

3. Recording Bias Adjustment

• Adjust the bias oscillator with decks I and II set to recording mode indenpendently.
• After the adjustment, caution should be exercised so as not to become under bias by checking the distortion rate.

No.	Mode	Input signal & test tape	Adjustment location		Measuring location	Adjustment value	Remarks
1.	STOP	Set the TAPE SELECTOR switch to the NORM position.					
2.	REC	Record the 315 Hz and 6.3 kHz signals at −20 dBv input level and playback.	Deck I	VR651 (Lch) VR652 (Rch)	LINE OUT	Repeatedly record, playback and adjust so that the playback level of 6.3 kHz signal becomes +0.5 dB±0.5 dB when compared with the 315 Hz signal.	
			Deck II	VR401 (Lch) VR402 (Rch)			

4. Recording Level Adjustment

• Adjust the bias oscillator with decks I and II set to recording mode indenpendently.

No.	Mode	Input signal & test tape	Adjustment location		Measuring location	Adjustment value	Remarks
1.	STOP	Set the TAPE SELECTOR switch to the NORM position.					
2.	REC PAUSE	Apply a 315 Hz/0 dBv signal to the line Input terminals, load the STD-630 test tape.	Rec Level control volume		TP. 1 (Lch) TP. 2 (Rch)	– 11.2 dBv	
3.	STOP	Set the DOLBY NR switch to the ON position. (DOLBY B)					
4.	REC/ PLAY	Record the above signal onto the STD-630 test tape, and playback.	Deck I	VR351 (Lch) VR352 (Rch)	TP. 1 (Lch) TP. 2 (Rch)	Repeatedly record, playback and adjust so that the playback signal level becomes – 11.2 dB.	
			Deck II	VR301 (Lch) VR302 (Rch)			
5.	STOP	Set the TAPE SELECTOR switch to the CrO_2 position.					
6.	REC/ PLAY	Record the above signal onto the STD-620 test tape, and playback.	Check		TP. 1 (Lch) TP. 2 (Rch)	– 11.2 dBv ± 1.5 dB	
7.	STOP	Set the TAPE SELECTOR switch to the METAL position.					
8.	REC/ PLAY	Record the above signal onto the STD-610 test tape, and playback.	Check		TP. 1 (Lch) TP. 2 (Rch)	– 11.2 dBv ± 1.5 dB	

5. Level Meter Check

No.	Mode	Input signal & test tape	Adjustment location	Measuring location	Adjustment value	Remarks
1.	REC PAUSE	Apply a 315 Hz/– 10 dBv (316 mV) signal to the Line Input terminals.	Rec Level control volume	TP. 1 (Lch) TP. 2 (Rch)	Check that the level meters "0 dB" light up within – 11.2 dBv ± 2 dB of the signal output level.	

10. IC DESCRIPTIONS

● TC9180N

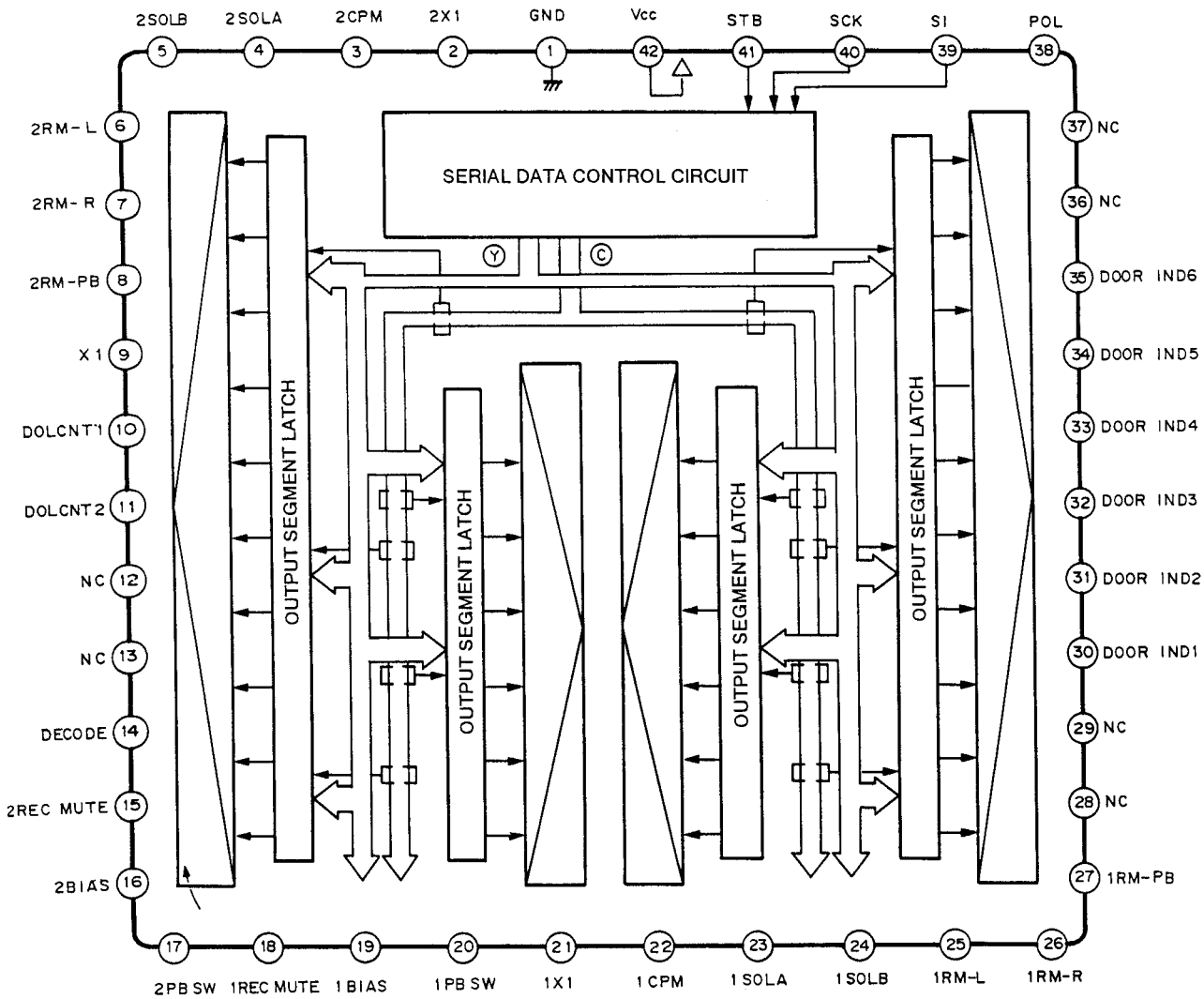

Pin No.	Name	Description
1	GND	GND terminal
2	2×1	×2 speed control mechanism 2. ×2 speed at "L"
3	2CPM	Capstan motor control mechanism 2. ON at "H"
4	2SOLA	Solenoid control mechanism 2. Solenoid ON at "H"
5	2SOLB	Solenoid low voltage control mechanism 2. Low voltage at "H"
6	2RM–L	Reel motor rotating direction control mechanism 2. REV direction ON at "H"
7	2RM–R	Reel motor rotating direction control mechanism 2. FWD direction ON at "H"
8	2RM–PB	Reel motor torque control mechanism 2. Play torque at "H"
9	×1	Amplifier system ×2 speed control. ×2 speed at "L"
10	DOLCNT1	Dolby selecting control
11	DOLCNT2	Dolby selecting control
12	NC	
13	NC	
14	DECODE	Encode/decode selecting control. Decoded at "H"
15	2RECMUTE	Recording mute control mechanism 2. ON at "H"
16	2BIAS	Bias control mechanism 2. ON at "H"
17	$\overline{\text{2PBSW}}$	REC/PB head selecting control mechanism 2. PB at "L"
18	1RECMUTE	Recording mute control mechanism 1. ON at "H"
19	1BIAS	Bias control mechanism 1. ON at "H"
20	$\overline{\text{1PBSW}}$	REC/PB head selecting control mechanism 1. PB at "L"
21	NC	
22	1×1	×2 speed control mechanism 1. ×2 speed at "L"
23	1CPM	Capstan motor control mechanism 1. ON at "H"
24	1SOLA	Solenoid control mechanism 1. Solenoid ON at "H"
25	1SOLB	Solenoid low voltage control mechanism 1. Low voltage at "H"
26	1RM–L	Reel motor rotating direction control mechanism 1. REV direction ON at "H"
27	1RM–R	Reel motor rotating direction control mechanism 1. FWD direction ON at "H"
28	1RM–PB	Reel motor torque control mechanism 1. PLAY torque at "H"
29	NC	
30	DOOR IND1	Tray LED display control output
31	DOOR IND2	Tray LED display control output
32	DOOR IND3	Tray LED display control output
33	DOOR IND4	Tray LED display control output
34	DOOR IND5	Tray LED display control output
35	DOOR IND6	Tray LED display control output
36	NC	
37	NC	
38	POL	Output logical control input. Connected to GND
39	SI	Communication data input
40	SCK	Communication clock input
41	STB	Strobe signal input
42	Vcc	Power terminal (+5V)

● PD3185B

Pin No.	Name	Description
1	Si	Segment output, key scan output
2	Sj	Segment output, key scan output
3	Sk	Segment output, key scan output
4	Sl	Segment output, key scan output
5	Sm	Segment output, key scan output
6	G7	Grid output
7	G6	Grid output
8	G5	Grid output
9	G4	Grid output
10	G3	Grid output
11	G2	Grid output
12	G1	Grid output
13	CDOUT	CD synchronizing control output
14	SW–M	SW–M input. ON at "L"
15	SW–F	SW–F input. ON at "L"
16	SW–L	SW–L input. ON at "L"
17	CDIN	CD synchronizing control input
18	SENSE2–T	Take–up side sensing pulse input side 2
19	SI	Memory communication data input
20	ENC3	Carrier encoder input
21	ENC2	Carrier encoder input
22	ENC1	Carrier encoder input
23	ENC0	Carrier encoder input
24	$\overline{CE}$	Chip enable output. Memory selection at "L"
25	SCK	Communication clock with memory
26	NC	
27	$\overline{LINE\ MUTE}$	Line mute control output. ON at "L"
28	$\overline{POFF}$	Power off pulse input. Interrupting at "H" to "L"
29	$\overline{REMOCON}$	Remote control pulse input
30	METER–L	Lch meter input
31	METER–R	Rch meter input
32	Vcc	Power terminal (+5V)

Pin No.	Name	Description
33	SONG	Song detection input. Song existing at "H"
34	SENSE1–S	Supply side sensing pulse input side 1
35	SENSE1–T	Take–up side sensing pulse input side 1
36	NC	
37	MTR0	Changer motor selecting control output. Loading motor at "H"
38	MTR1	Changer motor rotating direction control output
39	MTR2	Changer motor rotating direction control output
40	MTR3	Changer motor speed control output
41	NC	
42	$\overline{KEY5}$	Key scan return data input
43	$\overline{KEY4}$	Key scan return data input
44	$\overline{KEY3}$	Key scan return data input
45	$\overline{KEY2}$	Key scan return data input
46	$\overline{KEY1}$	Key scan return data input
47	RESET	Reset pulse input. Reset at "H"
48	OSC2	Clock output
49	OSC1	Clock input
50	GND	GND terminal
51	NC	
52	NC	
53	TEST	Connected to +5V
54	SO	Memory and output extension IC communication data output
55	SCK	Output extension IC communication clock output
56	STB	Output expansion IC communication strobe output
57	Sa	Segment output, key scan output, level scan output –20 dB
58	Sb	Segment output, key scan output, level scan output –10 dB
59	Sc	Segment output, key scan output, level scan output –6 dB
60	Sd	Segment output, key scan output, level scan output –3 dB
61	Se	Segment output, key scan output, level scan output 0 dB
62	Sf	Segment output, key scan output, level scan output +3 dB
63	Sg	Segment output, key scan output, level scan output +6 dB
64	Sh	Segment output, key scan output

● CXK1011P

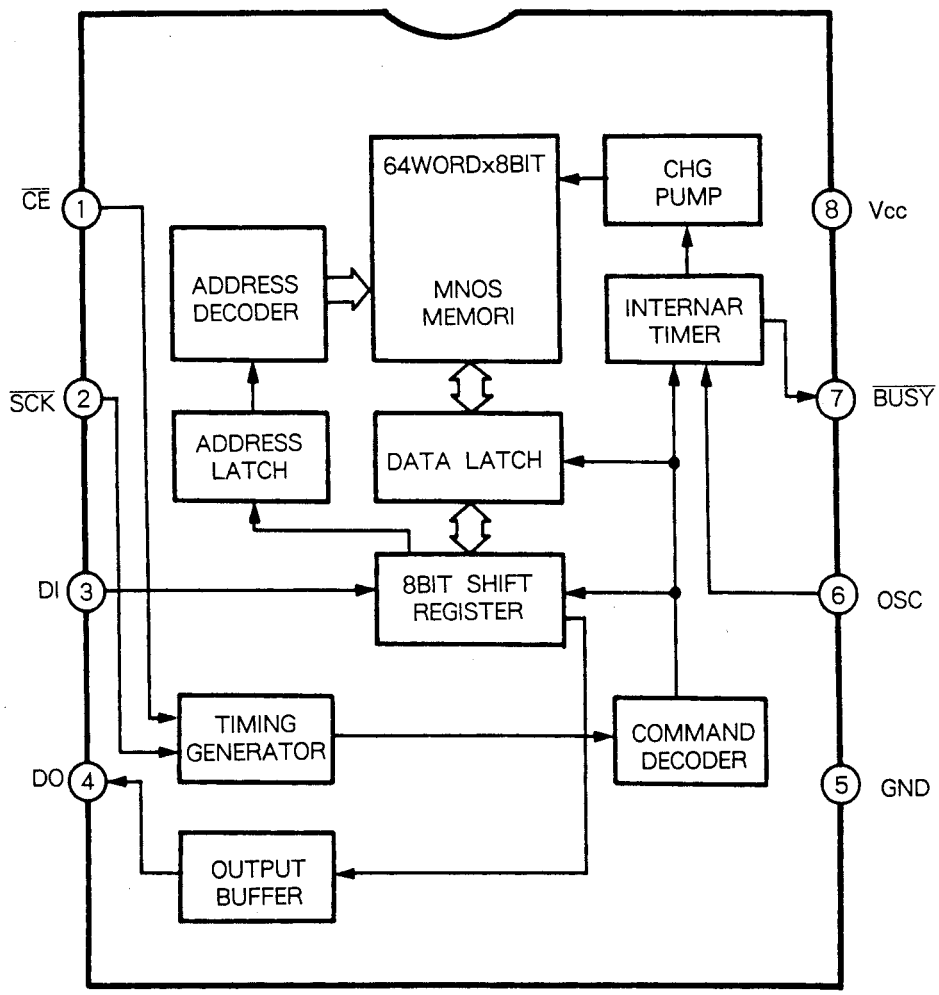

Pin description

Pin No.	I/O	Symbol	Description
1	I	$\overline{CE}$	Chip enable input terminal
2	I	$\overline{SCK}$	Sync clock input terminal
3	I	DI	Data input terminal
4	O	DO	Data output terminal
5	–	GND	Power terminal (normal: 0V)
6	I	$\overline{OSC}$	Oscillation terminal (Fixed to release or Vcc when using internal circuit)
7	O	$\overline{BUSY}$	Busy signal output terminal
8	–	Vcc	Power terminal (normal: +5V)

● BA3126N

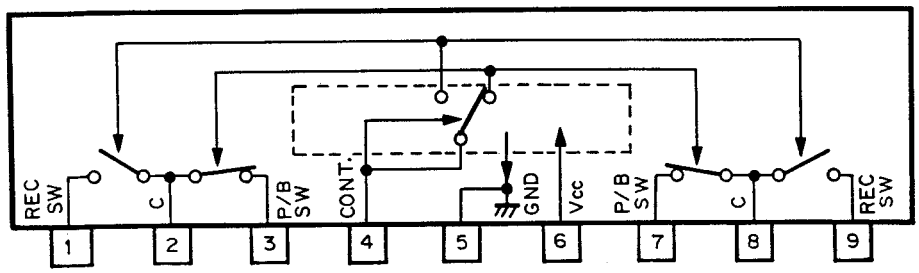

● LB1641

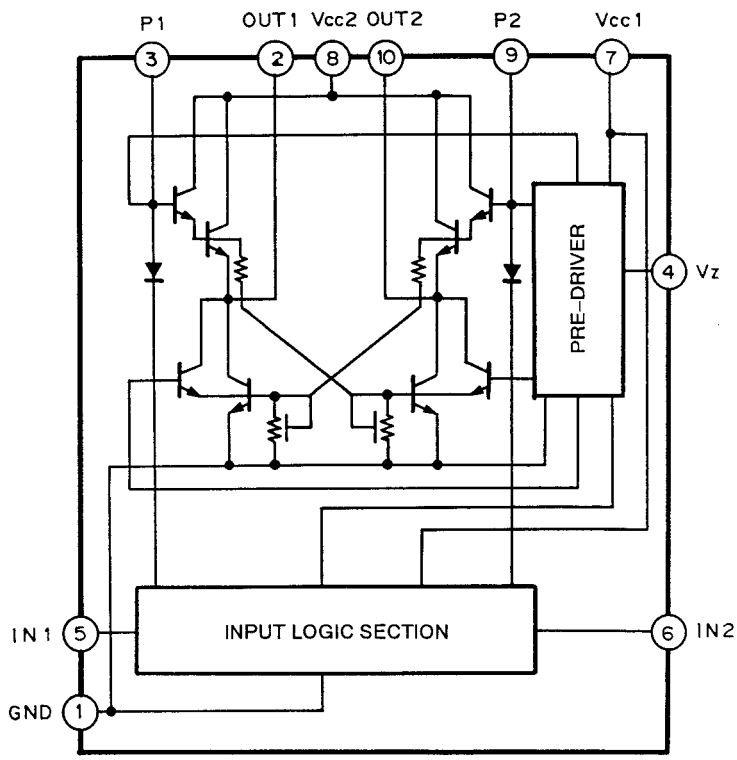

ANODE CONNECTION

	7G	6G	5G	4G	3G	2G	1G
P1	1	2	3	4	5	6	II (S5)
P2	B1	B2	B3	B4	B5	B6	B7
P3	-20	-10	-6	-3	0	+3	+6
P4	B8	B9	B10	B11	B12	B13	B14
P5	S7	B18	B17	B16	B15	(REV.)	-
P6	B	B19	h	h	col	h	-
P7	C	B20	g	g	g	g	RELAY
P8	COPY	-	f	f	f	f	CD SYNC.
P9	I	-	e	e	e	e	II (S6)
P10	▷ (S2)	-	d	d	d	d	▷ (S4)
P11	◁ (S1)	-	c	c	c	c	◁ (S3)
P12	S8	PLAY	b	b	b	b	PLAY
P13	-	REC	a	a	a	a	REC
P14	DOLBY NR	S9	E	E	E		-

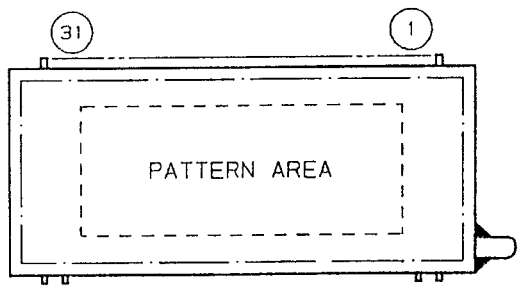

PIN CONNECTION

PIN NO	31	30	29	28	27	26	25	24	23	22	21	20	19	18	17	16	15	14	13	12	11	10	9	8	7	6	5	4	3	2	1
CONNECTION	F2	F2	NP	NP	P2	P3	P4	P5	P3	P2	P1	P10	P6	P7	P8	P9	NC	NC	NC	NC	G7	G6	G5	G4	G3	G2	G1	P14	NP	F1	F1

NOTE 1) F1,F2 --- Filament
2) NP ------ No pin
3) NC ------ No connection
4) 1G~7G --- Grid

GRID ASSIGNMENT

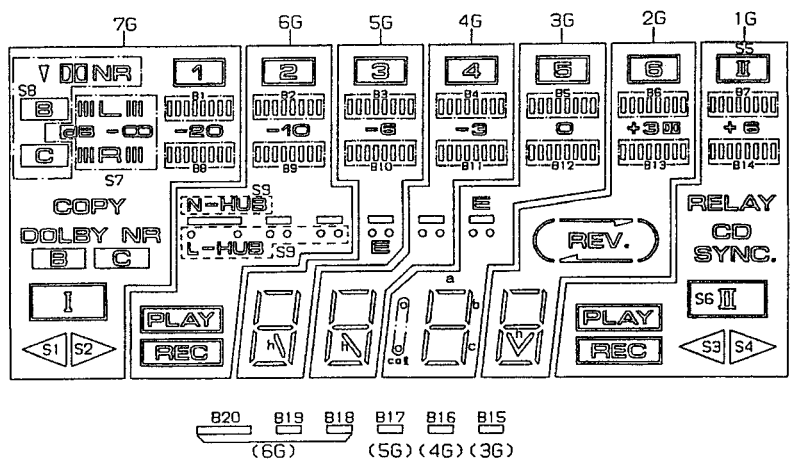

11. FOR SD TYPE

CONTRAST OF MISCELLANEOUS PARTS

NOTES:
- Parts without part number cannot be supplied.
- The ⚠ mark found on some component parts indicates the importance of the safety factor of the part. Therefore, when replacing, be sure to use parts of identical designation.
- Parts marked by "⊙" are not always kept in stock. Their delivery time may be longer than usual or they may be unavailable.

The CT–WM77R/SD type is the same as the CT–WM77R/KUC type with the exception of the following sections.

Mark	Symbol & Description	Part No.		Remarks
		CT–WM77R/ KUC type	CT–WM77R/ SD type	
⚠	Strain relief	CM–22C	CM–22B	
⚠	AC Power cord	PDG1015	PDG1013	
⚠	Voltage selector	·····	PSB1002	
⚠	FU501, FU502 Fuse (1.5A)	REK1001	·····	
⚠	FU501, FU502 Fuse (1.6A)	·····	REK–102	
⚠	Power transformer (AC120V)	RTT1152	·····	
⚠	Power transformer (AC110/120–127/220/240V)	·····	RTT1161	
	Packing case	RHG1233	RHG1254	
	Operating instructions (Spanish)	·····	RRD1094	

12. PANEL FACILITIES

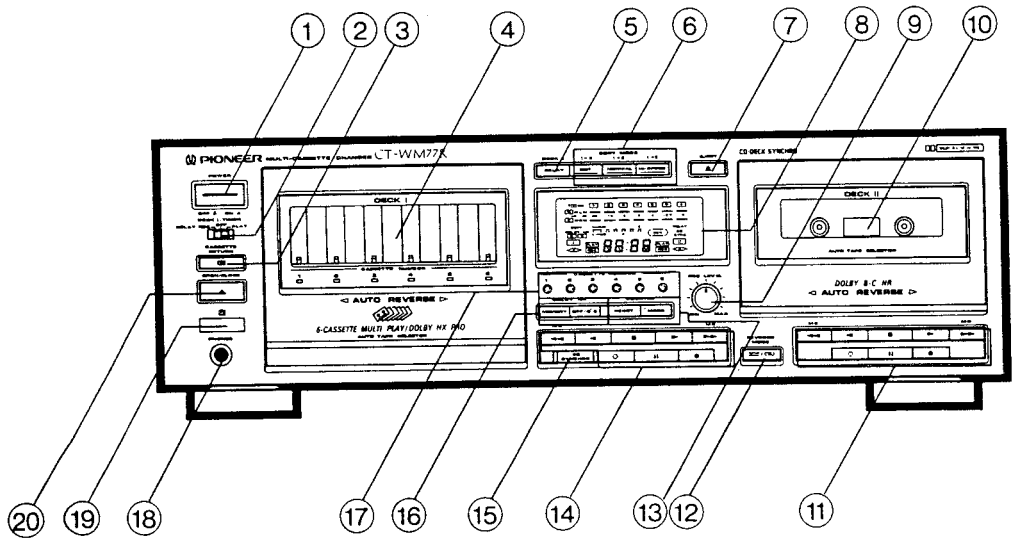

① **POWER switch**
When the POWER switch is pressed to turn the cassette deck on, the 6 cassette indicators on the cassette door flash to indicate that the circuits are warming up. After about 10 seconds, the circuits become stable and the cassette deck can be operated.
All the indicators in the display window will light when the power is turned on. The display will be set to its normal state when one of the operation buttons is pressed.

② **DECK I TIMER switch**
Use this switch to select the timer relay recording or timer relay playback functions.

③ **CASSETTE RETURN button**
Press this button to return the loaded cassette to the tray.

④ **DECK I Cassette door and tray**
All of the cassette indicators on the cassette door flash while the cassette deck is warming up. When the cassette door is closed and there are cassettes on the tray, the indicators for the tray slots which contain cassette tapes (including the currently loaded tape) will light. When a cassette is being loaded from the tray, the corresponding indicator flashes.

⑤ **RELAY button**
Press this button to select relay recording or relay playback. The RELAY indicator lights when relay mode is selected.

⑥ **COPY MODE buttons**

EDIT (I ▷ II):	Press this button to perform tape editing and copying from DECK I to DECK II.
NORMAL (I ◁ II):	Press this button to copy a tape from DECK II to DECK I.
HI-SPEED (I ◁ II):	Press this button to copy a tape from DECK II to DECK I at twice the normal speed.

⑦ **DECK II Eject button (EJECT)**
Press this button to open the cassette door of DECK II.

NOTE:
The cassette door cannot be opened while the tape is running (recording, playback, etc.). Press the stop (■) button of DECK II before pressing this button.

⑧ **Display window**

⑨ **REC LEVEL control knob**

⑩ **DECK II Cassette door**

⑪ **DECK II Operation buttons**

Recording (●):
When this button is pressed, the cassette deck enters recording standby mode. Recording begins when the play (▶ or ◀) button or pause (❚❚) button is pressed.

Pause (❚❚):
Press this button to temporarily pause recording or playback. Press the button again to resume recording or playback. The pause button cannot be used during fast-forward or fast-reverse. If this button is pressed after the recording (●) button is pressed, recording will begin.

Recording mute (○):
When this button is pressed during recording, the cassette deck creates a 4-second blank space on the tape and then enters recording standby mode.
If the button is pressed and held, the deck continues to create a blank space until the button is released.

Fast-forward (▶▶):
If this button is pressed during stop mode, the tape is fast-forwarded in the direction of the arrows (towards the end of side A or the beginning of side B). If it is pressed during playback, the cassette deck skips forward one selection for each press of the button (up to 15 selections), and playback resumes at the beginning of the designated selection.

Forward play (▶):
During stop mode, press this button to begin playback of side A; that is, the side facing outward (forward playback).
During recording standby mode, press this button to begin recording on side A.

Stop (■):
Press this button to stop the tape transport.

Reverse play (◀):
Press this button to begin playback of side B; that is, the side facing the rear of the cassette deck (reverse playback).
During recording standby mode, press this button to begin recording on side B.

Fast-reverse (◀◀):
If this button is pressed during stop mode, the tape is fast-forwarded in the direction of the arrows (towards the beginning of side A or the end of side B). If it is pressed during playback, the playback position skips backward by one selection for each press of the button (up to 15 selections), and playback resumes at the beginning of the designated selection.

⑫ **REVERSE MODE button**
Use this button to choose the tape transport mode.
⇒: One way mode. Tape transport stops after one side of a tape is played or recorded.
When relay mode is selected, after one cassette ends, playback or recording (of one side only) continues on the cassette in the next tape slot, and so on until the cassette in the highest numbered tape slot is reached.
⇄: Reverse mode. During playback, both sides of the tape are played back continuously until the tape has been played back 8 times (16 sides). During recording, both sides of the tape are recorded, and then tape transport stops.
When relay mode is selected, after both sides of one cassette have been recorded or played back once, playback or recording continues on the cassette in the next tape slot, and so on until the cassette in the highest numbered tape slot is reached.

NOTE:
During recording, relay playback and random playback, the auto reverse function will only operate when the tape is moving from the end of side A to the beginning of side B.
The tape cannot move automatically from the end of side B to the beginning of side A during these modes (i.e., the tape will stop at the end of side B even when reverse mode is selected). This indicates that the cassette deck will switch automatically from side A to side B, but will not switch automatically from side B to side A. If, for example, recording is started from the beginning of side B, the tape will stop after only one side is recorded, even though reverse mode is selected.

⑬ **COUNTER buttons**
MODE: Each time this button is pressed, the multifunction display switches between tape counter display mode and time counter display mode.
RESET: When this button is pressed, the tape counter is reset to 0000 and the time counter is reset to 00:00.

⑭ **DECK I Operation buttons**
These buttons operate in the same way as the operation buttons of DECK II, with the following exceptions:
Forward play (▶):
If the tray is open when this button is pressed, it will close automatically, the cassette in the lowest numbered slot will be loaded, and side A will be played back.
Reverse play (◀):
If the tray is open when this button is pressed, it will close automatically, the cassette in the lowest numbered slot will be loaded, and side B will be played back.

⑮ **CD ·Deck synchro recording button (CD SYNCHRO)**

⑯ **DOLBY* NR buttons**
DOLBY NR MEMORY button:
Press this button to begin setting the DOLBY NR system, or to check the current DOLBY NR settings.
DOLBY NR OFF/B/C button:
Press this button repeatedly to select the desired type of DOLBY NR. The selected type of DOLBY NR (B or C) is displayed. If no display appears, DOLBY NR OFF is selected.
When playing back Dolby NR-encoded tapes, always select the same position (OFF, B or C) used for recording.

*
- *Dolby noise reduction and HX PRO headroom extension manufactured under license from Dolby Laboratories Licensing Corporation. HX PRO originated by Bang & Olufsen.*
- *"Dolby", the double-D symbol DD and "HX PRO" are trademarks of Dolby Laboratories Licensing Corporation.*

⑰ **CASSETTE NUMBER buttons (1 ~ 6)**
Press one of these buttons to select the cassette which will be loaded from the tray into the tape transport mechanism of DECK I.

⑱ **PHONES jack**
This jack is designed for standard stereo headphones with a 6.3mm diameter plug.

⑲ **Remote control sensor window**
Receives infrared signals from the remote control unit.

⑳ **DECK I OPEN/CLOSE button (⏏)**
Press this button to open the cassette door. When the door is open, cassette tapes can be placed onto or removed from the tray. If a cassette is loaded in the tape transport mechanism (see page 5), the door can still be opened and tapes can be added or removed. However, DO NOT place a cassette in the tray slot previously occupied by the loaded cassette.

NOTE:
The cassette tray cannot be opened unless the POWER switch is turned OFF.

NOTE:
Please keep the diagram below in mind while operating the cassette deck. This will help you to avoid misoperations.

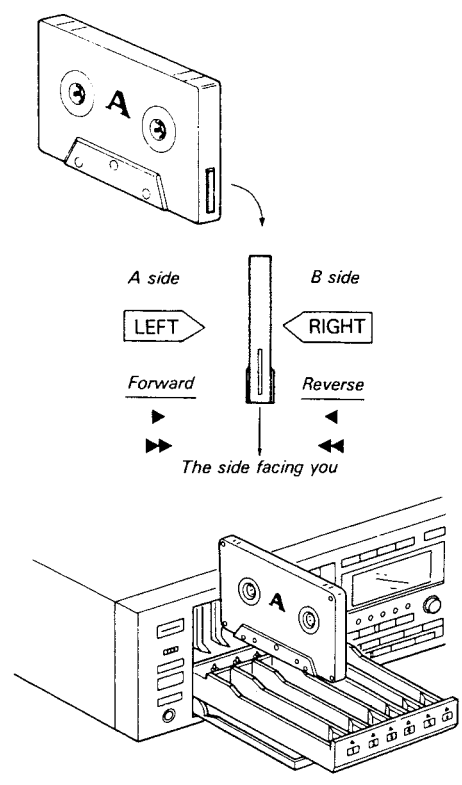

13. SPECIFICATIONS

System ..... 4-track, 2-channel stereo
Heads ..... "Hard Permalloy" recording/playback head ×2
"Ferrite" erasing head ×2
Motors ..... DC servo motor (capstan) ×2
DC motor (reel, open/close, loading) ×4
Wow and flutter ..... No more than 0.055% (WRMS)
No more than ±0.16% (DIN)
Fast winding time ..... Approximately 90 seconds (C-60 tape)

Frequency response
—20 dB recording:
Normal tape ..... 20 to 17,000 Hz, ±6 dB
Chrome tape ..... 20 to 18,000 Hz, ±6 dB
Metal tape ..... 20 to 19,000 Hz, ±6 dB
Signal-to-Noise ratio
Dolby NR OFF ..... More than 57 dB
Noise reduction effect
Dolby NR B type ON ..... More than 10 dB (at 5 kHz)
Dolby NR C type ON ..... More than 19 dB (at 5 kHz)

Harmonic distortion ..... No more than 1.0% (0 dB)
Input (Sensitivity)
LINE (INPUT) ..... 63 mV (Input impedance 50 kΩ)
Output (Reference level)
LINE (OUTPUT) ..... 316 mV (Output impedance 5.8 kΩ)
Phones ..... 0.25 mW (Load impedance 8 Ω)

Miscellaneous
Power requirements
U.S., Canadian model ..... AC 120 Volts, 60 Hz
U.S. military and other destination models ..... AC 110 V/120 V~127 V/220 V/240 V (switchable), 50/60 Hz
Power consumption
U.S., Canadian model 36W
U.S. military and other destination models 38W
Dimensions ..... 420 (W) ×136 (H) × 364 (D) mm
16-9/16(W) ×5-3/8(H) ×14-5/16(D) in
Weight (without package) ..... 8.3 kg (18 lb 5 oz)

Accessories
Operating instructions 1
Connection cord with pin plugs 2
CD·Deck synchro control cord 1
System remote control cord 1
Remote control unit 1
Dry cell batteries "AAA" [IEC R03 (UM-4)] 2

Subfunctions
- DOLBY NR B/C types
- DOLBY HX PRO (DECK I only)
- DOLBY NR memory
- High-speed and normal-speed tape copying (DECK II → DECK I)
- Edit copying (DECK I → DECK II)
- Relay edit copying (DECK I → DECK II)
- Synchronized copy start
- Blank skip
- Music search over ±15 selections
- CD · Deck synchro recoring capability (DECK I only)
- Tape counter/Time counter
- Tape Remaining Time indicators (6 seg; DECK I only)
- FL peak level meter (7 seg + ∞)
- Automatic space recording mute
- One-touch recording pause
- Automatic tape selector
- Automatic reverse
- Phones jack
- TIMER RELAY Recording/TIMER Playback (DECK I only)
- System remote control compatible
- Relay recording/Relay playback (DECK I only)
- All rewind (DECK I only)
- Cassette random playback (DECK I only)
- Cassette scan playback (DECK I only)

NOTE:
Specifications and design subject to possible modifications without notice due to improvements.